Table of contents

Notations

As presented in [Petit et al., 2001] for the Z12-T, the calibration of a geodetic system is divided in (up to) 6 different parts (Figure 1)

- X_P = Delay of the 1PPS-in with respect to the laboratory reference
- X_O = Delay of the "internal reference" with respect to the 1PPS-in

($X_P + X_o$) = REFDLY.

- X_C = antenna cable delay
- [X_D = short cable + splitter delay]

($X_C + X_D$) = CABDLY. In practice, X_D is generally not used.

- X_R = receiver internal delay, measured from the "internal reference"
- X_S = antenna delay

($X_R + X_S$) = INTDLY.

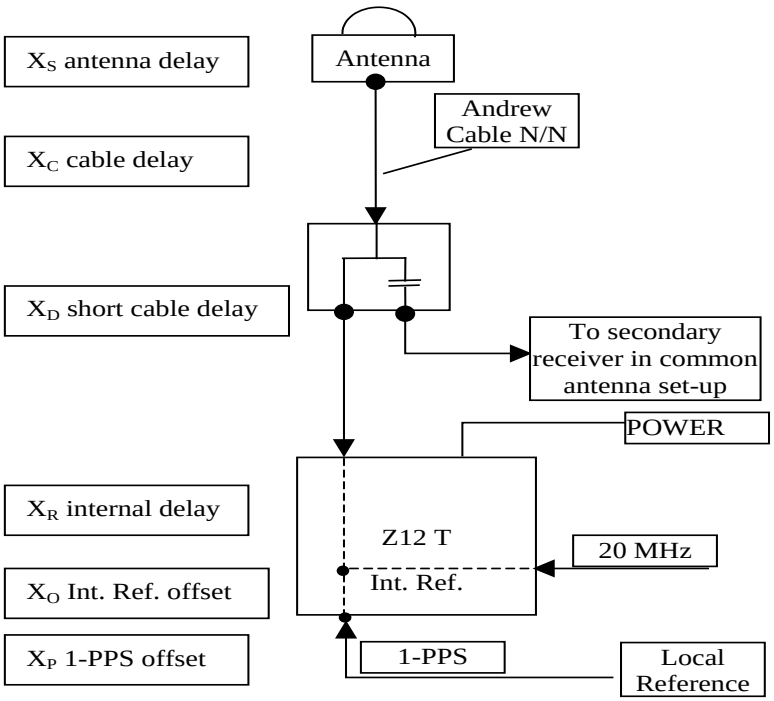

Figure 1: Definition of the different delays used in the most general set-up of a geodetic system (here shown for a Z12-T) from [Petit et al, 2001].

2/ phase 2

Laboratories: BIPM, SU

2.1/ BIPM (18096)

Period

MJD 58214 to 58220

Delays

BP1J:

X_O = 133.98 ns (187.86-53.88)
X_P = 47.60 ns (BP1R+C139+BP1S+C172)
REFDLY = 181.58 ns
CABDLY = 128.73 ns (C138)

BP1K:

10 MHz factory calibration = 4.45 ns
1PPS-freq offs = 89.51 ns
1PPS-freq corr = 2.01 ns
Total delay = 49.71 ns

X_O = 2.01 ns
X_P = 47.70 ns (BP1R+C139+BP1S+C162)
REFDLY = 49.71 ns
CABDLY = 141.57 ns (C131)

Setup at the BIPM

Annex A - Information Sheet

(to be repeated for each calibrated system)

Laboratory:	BIPM
Date and hour of the beginning of measurements:	MJD 58214
Date and hour of the end of measurements:	MJD 58220

Information on the system

	Local:	Travelling:
4-character BIPM code	BP1J	BP1K
• Receiver maker and type: Receiver serial number:	Septentrio PolaRx4proTR 27	PikTime 0136
1 PPS trigger level /V:		
• Antenna cable maker and type: Phase stabilised cable (Y/N):		
Length outside the building /m:	~ 15 m	~ 15 m
• Antenna maker and type: Antenna serial number:	Septentrio Sepchoke_MC 5131	Javad RingAnt-G3T 00526
Temperature (if stabilised) /°C		

Measured delays /ns

(if needed fill box "Additional Information" below)

	Local:	Travelling:
• Delay from local UTC to receiver 1 PPS-in:	47.60 ns	2.01 ns
Delay from 1 PPS-in to internal Reference (if different): (see section 2 for details)	133.98 ns	47.70 ns
• Antenna cable delay:	128.73 ns	141.57 ns
Splitter delay (if any):		(1)
Additional cable delay (if any):		(1)

Data used for the generation of CGGTTS files

• INT DLY (GPS) /ns:	
• INT DLY (GLONASS) /ns:	
• CAB DLY /ns:	
• REF DLY /ns:	
• Coordinates reference frame:	
Latitude or X /m:	
Longitude or Y /m:	
Height or Z /m:	

General information

• Rise time of the local UTC pulse:	
• Is the laboratory air conditioned:	
Set temperature value and uncertainty:	21 ± 1°C
Set humidity value and uncertainty:	

(1) For a trip with closure, not needed if the traveling equipment is used in the same set-up throughout.

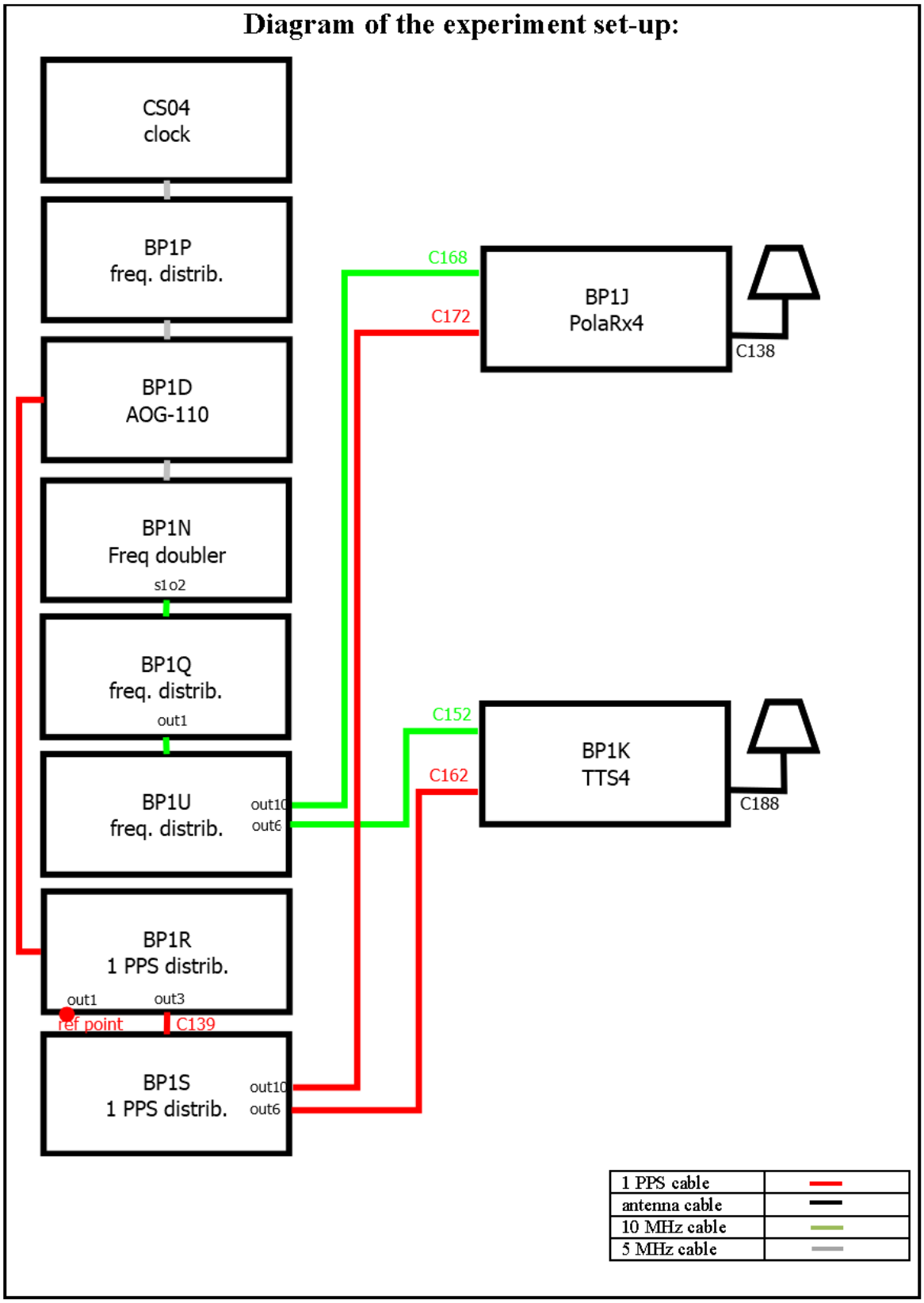
Diagram of the experiment set-up:
CS04
clock
BP1P
freq. distrib.
BP1D
AOG-110
BP1N
Freq doubler
s1o2
BP1Q
freq. distrib.
out1
BP1U
freq. distrib.
out10
out6
BP1R
1 PPS distrib.
out1
out3
ref point
C139
BP1S
1 PPS distrib.
out10
out6
C168
C172
BP1J
PolaRx4
C138
C152
C162
BP1K
TTS4
C188
1 PPS cable
antenna cable
10 MHz cable
5 MHz cable

Log of Events / Additional Information :

All measurements at BIPM carried out by L. Tisserand.

Equipment used to measure delays is a Time Interval Counter (TIC), model SR620, maker Stanford Research Systems, serial number 4680, with measurement uncertainty typically less than 0.5 ns (using external reference frequency as timebase).

BP1K-BP1J

COMPUTATION OF BASELINE

Number of codes to fit baseline and biases = 143665
Number of huge residuals = 13. New iteration
Computed code bias (P1/P2)/m = 15.495 14.862
Computed baseline (X,Y,Z)/m = 1.765 0.260 -0.981
RMS of residuals /m = 0.642

Number of phase differences to fit baseline = 139973
A priori baseline (X,Y,Z)/m = 1.765 0.260 -0.981
20156 clock jitters computed out of 20156 intervals
AVE jitter /ps = 0.2 RMS jitter /ps = 4.8

Iter 1 Large residuals L1= 1
Iter 1 Large residuals L2= 4
Computed baseline L1 (X,Y,Z)/m = -0.272 -0.047 -0.246
RMS of residuals L1 /m = 0.004
Computed baseline L2 (X,Y,Z)/m = -0.257 -0.048 -0.243
RMS of residuals L2 /m = 0.005

Iter 2 Large residuals L1= 1
Iter 2 Large residuals L2= 4
Computed baseline L1 (X,Y,Z)/m = -0.272 -0.047 -0.246
RMS of residuals L1 /m = 0.004
Computed baseline L2 (X,Y,Z)/m = -0.257 -0.048 -0.243
RMS of residuals L2 /m = 0.005

Final baseline L1 (X,Y,Z)/m = 1.493 0.213 -1.228
Final baseline L2 (X,Y,Z)/m = 1.508 0.212 -1.224

COMPUTATION OF CODE DIFFERENCES

Number of code differences = 145520

Global average of individual differences
Code #pts, ave/ns, rms/ns
C1: 144639 53.167 2.733
C2: 86744 50.892 2.635
P1: 143375 52.581 2.510
P2: 143270 50.436 2.711

Number of 300s epochs in out file = 2016
Code #pts, median/ns, ave/ns, rms/ns
C1: 14478 53.224 53.215 1.231
C2: 8667 50.979 50.929 1.327
P1: 14336 52.683 52.619 1.198
P2: 14328 50.524 50.449 1.464

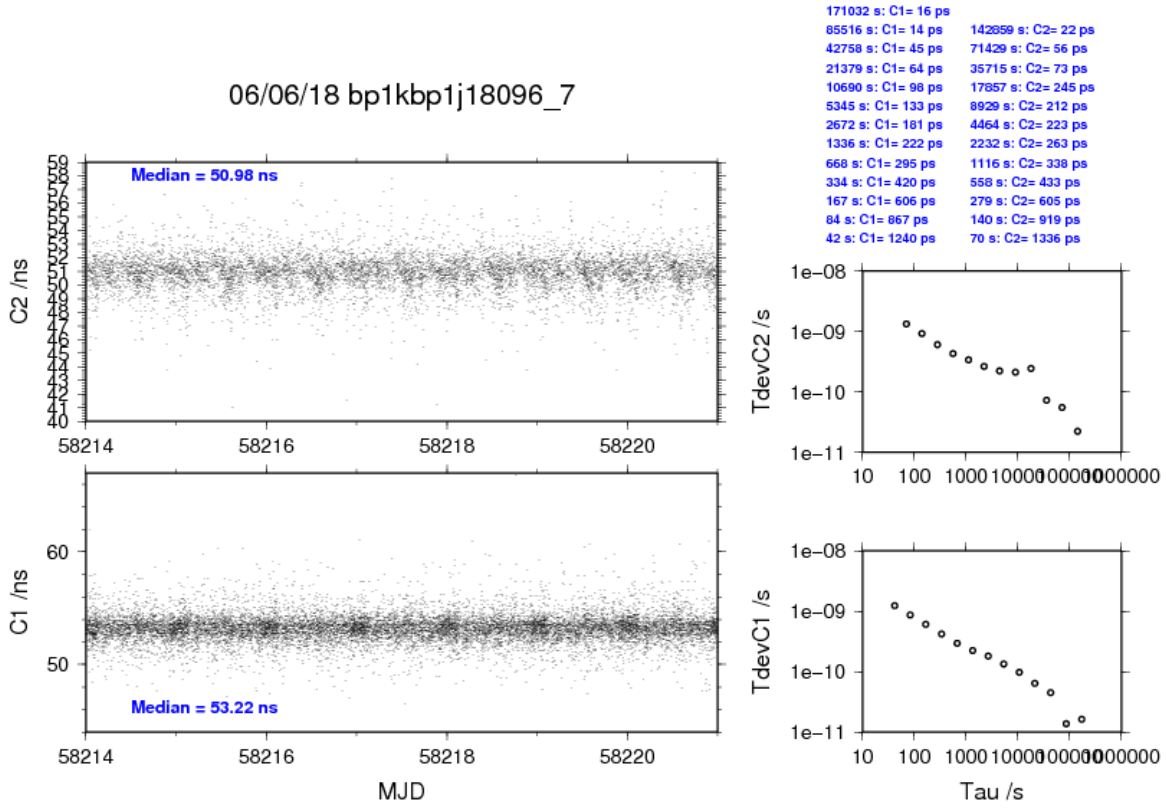
06/06/18 bp1kbp1j18096_7
Median = 50.98 ns
Median = 53.22 ns
C2 /ns
C1 /ns
MJD
171032 s: C1= 16 ps
85516 s: C1= 14 ps
42758 s: C1= 45 ps
21379 s: C1= 64 ps
10690 s: C1= 98 ps
5345 s: C1= 133 ps
2672 s: C1= 181 ps
1336 s: C1= 222 ps
668 s: C1= 295 ps
334 s: C1= 420 ps
167 s: C1= 606 ps
84 s: C1= 867 ps
42 s: C1= 1240 ps
142859 s: C2= 22 ps
71429 s: C2= 56 ps
35715 s: C2= 73 ps
17857 s: C2= 245 ps
8929 s: C2= 212 ps
4464 s: C2= 223 ps
2232 s: C2= 263 ps
1116 s: C2= 338 ps
558 s: C2= 433 ps
279 s: C2= 605 ps
140 s: C2= 919 ps
70 s: C2= 1336 ps
TdevC2 /s
TdevC1 /s
Tau /s

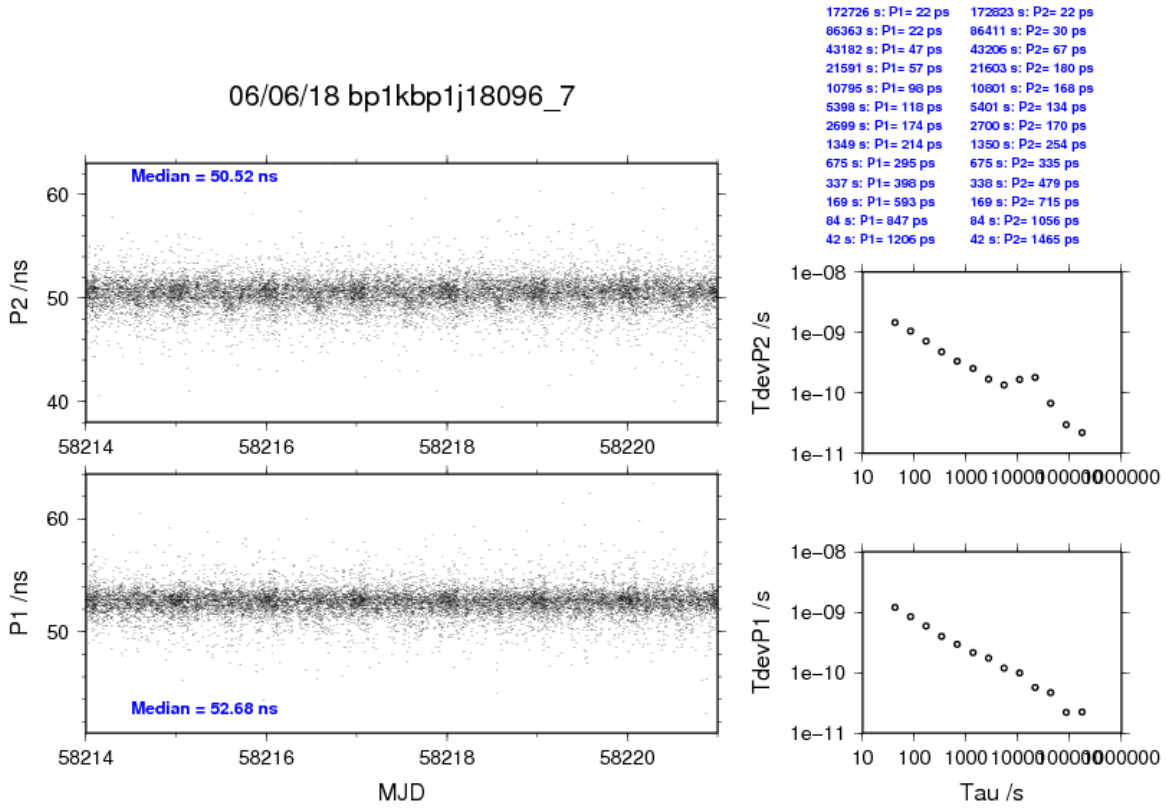
06/06/18 bp1kbp1j18096_7
Median = 50.52 ns
Median = 52.68 ns
P2 /ns
P1 /ns
MJD
172726 s: P1= 22 ps
86363 s: P1= 22 ps
43182 s: P1= 47 ps
21591 s: P1= 57 ps
10795 s: P1= 98 ps
5398 s: P1= 118 ps
2699 s: P1= 174 ps
1349 s: P1= 214 ps
675 s: P1= 295 ps
337 s: P1= 398 ps
169 s: P1= 593 ps
84 s: P1= 847 ps
42 s: P1= 1206 ps
172823 s: P2= 22 ps
86411 s: P2= 30 ps
43206 s: P2= 67 ps
21603 s: P2= 180 ps
10801 s: P2= 168 ps
5401 s: P2= 134 ps
2700 s: P2= 170 ps
1350 s: P2= 254 ps
675 s: P2= 335 ps
338 s: P2= 479 ps
169 s: P2= 715 ps
84 s: P2= 1056 ps
42 s: P2= 1465 ps
TdevP2 /s
TdevP1 /s
Tau /s

2.2/ SU (18146)

Period

MJD to 58264 to 58272

Delays

BP1K: (cf page 10)
X_O = 1.30 ns
X_P = 219.50 ns)
REFDLY = 220.80 ns
CABDLY = 141.57 ns

SU19: (cf page 10)
X_O = -3.05 ns
X_P = 197.50 ns
REFDLY = 194.45 ns
CABDLY = 48.17 ns

SU31: (cf page 11)
REFDLY = 207.50 ns
CABDLY = 143.20 ns
INT DLY: 39.2 ns GPSC1, 38.3 ns GPSP1, 37.5 ns GPSC2, 36.8 ns GPSP2

SUCL: (cf page 12)
REFDLY = 207.50 ns
CABDLY = 128.20 ns
INT DLY: -33.8 ns GPSC1, -34.6 ns GPSP1, -33.7 ns GPSC2, -34.5 ns GPSP2

Setup at the SU

Information Sheet 1

Laboratory:	**SU**
Date and hour of the beginning of measurements:	**26 May 2018 (58264 00h UTC)**
Date and hour of the end of measurements:	**03 June 2018 (58272 23h UTC)**

Information on the system

	Local:	**Travelling:**
4-character BIPM code	SU19	BP1K
• Receiver maker and type: Receiver serial number:	PikTime Systems TTS-4 119	PikTime Systems TTS-4 136
1 PPS trigger level /V:	0.5 V	0.5 V
• Antenna cable maker and type: Phase stabilised cable (Y/N):	AOS FSJ 1-50A Y	TTS4-136 Y
Length outside the building /m:	5 m	5 m
• Antenna maker and type: Antenna serial number:	Leica Geosystem AG, AR25 09330030	Javad Ring Ant G3T 00526
Temperature (if stabilised) /°C		

Measured delays /ns

(if needed fill box "Additional Information" below)

	Local:	**Travelling:**
• Delay from local UTC to receiver 1 PPS-in:	197.5 ns	219.50
Delay from 1 PPS-in to internal Reference (if different): (see section 2 for details)	-3.05	1.30
• Antenna cable delay:	48.17	141.5
Splitter delay (if any):		
Additional cable delay (if any):		

Data used for the generation of CGGTTS files

• INT DLY (GPS) /ns:	-21.80 (C1); -26.73 (P1); -20.36 (C2); -29.99 (P2)	-33.80 (C1); -33.73 (P1); -37.69 (C2); -37.85 (P2)
• INT DLY (GLONASS) /ns:	-24.00 (C1); -26.32 (P1); -18.81 (C2); -23.12 (P2)	-38.58 (C1); -38.43 (P1); -33.73 (C2); -33.75 (P2)
• CAB DLY /ns:	48.17	141.57 (GPS) 141.70 (GLONASS)
• REF DLY /ns:	194.45	220.80
• Coordinates reference frame:	ITRF	ITRF
Latitude or X /m:	+2845458.99m	+2845460.12m
Longitude or Y /m:	+2160956.66m	+2160955.25m
Height or Z /m:	+5265991.67m	+5265991.52m

General information

• Rise time of the local UTC pulse:	3.7 ns
• Is the laboratory air conditioned:	Yes
Set temperature value and uncertainty:	19.9 °C ± 0.5 °C
Set humidity value and uncertainty:	41.8% ± 8%

Information Sheet 2

Laboratory:	**SU**
Date and hour of the beginning of measurements:	**26 May 2018 (58264 00h UTC)**
Date and hour of the end of measurements:	**03 June 2018 (58272 23h UTC)**

Information on the system

	Local:	**Travelling:**
4-character BIPM code	SU31	BP1K
• Receiver maker and type: Receiver serial number:	DICOM GTR51 1604031	PikTime Systems TTS-4 136
1 PPS trigger level /V:	1.0 V	0.5 V
• Antenna cable maker and type: Phase stabilised cable (Y/N):	Andrews FSJ-1 Y	TTS4-136 Y
Length outside the building /m:	15 m	5 m
• Antenna maker and type: Antenna serial number:	Leica LEIAR25 726435	Javad Ring Ant G3T 00526
Temperature (if stabilised) /°C		

Measured delays /ns

(if needed fill box "Additional Information" below)

	Local:	**Travelling:**
• Delay from local UTC to receiver 1 PPS-in:	207.50	219.50
Delay from 1 PPS-in to internal Reference (if different): (see section 2 for details)		1.30
• Antenna cable delay:	143.20	141.5
Splitter delay (if any):		
Additional cable delay (if any):		

Data used for the generation of CGGTTS files

• INT DLY (GPS) /ns:	39.2 (C1); 38.3 (P1); 37.5 (C2); 36.8 (P2)	-33.80 (C1); -33.73 (P1); -37.69 (C2); -37.85 (P2)
• INT DLY (GLONASS) /ns:	43.6 (C1); 43.4 (P1); 45.1 (C2); 44.8 (P2)	-38.58 (C1); -38.43 (P1); -33.73 (C2); -33.75 (P2)
• CAB DLY /ns:	143.20	141.57 (GPS) 141.70 (GLONASS)
• REF DLY /ns:	207.50	220.80
• Coordinates reference frame:	ITRF	ITRF
Latitude or X /m:	+2845462.98m	+2845460.12m
Longitude or Y /m:	+2160954.08m	+2160955.25m
Height or Z /m:	+5265990.54m	+5265991.52m

General information

• Rise time of the local UTC pulse:	3.7 ns
• Is the laboratory air conditioned:	Yes
Set temperature value and uncertainty:	19.5 °C ± 0.5 °C
Set humidity value and uncertainty:	61% ± 8%

Information Sheet 3

Laboratory:	**SU**
Date and hour of the beginning of measurements:	**26 May 2018 (58264 00h UTC)**
Date and hour of the end of measurements:	**03 June 2018 (58272 23h UTC)**

Information on the system

	Local:	**Travelling:**
4-character BIPM code	SUCL	BP1K
• Receiver maker and type: Receiver serial number:	DICOM GTR51 1605001	PikTime Systems TTS-4 136
1 PPS trigger level /V:	1.0 V	0.5 V
• Antenna cable maker and type: Phase stabilised cable (Y/N):	Belden H155A00 N	TTS4-136 Y
Length outside the building /m:	15 m	5 m
• Antenna maker and type: Antenna serial number:	NovAtel NOV703GGG.R2 NEG16110005	Javad Ring Ant G3T 00526
Temperature (if stabilised) /°C		

Measured delays /ns

(if needed fill box "Additional Information" below)

	Local:	**Travelling:**
• Delay from local UTC to receiver 1 PPS-in:	207.50 ns	219.50
Delay from 1 PPS-in to internal Reference (if different): (see section 2 for details)		1.30
• Antenna cable delay:	128.19 ns	141.5
Splitter delay (if any):		
Additional cable delay (if any):		

Data used for the generation of CGGTTS files

• INT DLY (GPS) /ns:	-33.8 (C1); -34.6 (P1); -33.7 (C2); -34.5 (P2)	-33.80 (C1); -33.73 (P1); -37.69 (C2); -37.85 (P2)
• INT DLY (GLONASS) /ns:	-31.6 (C1); -31.7 (P1); -22.2 (C2); -22.5 (P2)	-38.58 (C1); -38.43 (P1); -33.73 (C2); -33.75 (P2)
• CAB DLY /ns:	128.2	141.57 (GPS) 141.70 (GLONASS)
• REF DLY /ns:	207.5	220.80
• Coordinates reference frame:	ITRF	ITRF
Latitude or X /m:	+2845455.31 m	+2845460.12m
Longitude or Y /m:	+2160958.42 m	+2160955.25m
Height or Z /m:	+5265992.82 m	+5265991.52m

General information

• Rise time of the local UTC pulse:	3.7 ns
• Is the laboratory air conditioned:	Yes
Set temperature value and uncertainty:	19.5 °C ± 0.5 °C
Set humidity value and uncertainty:	61% ± 8%

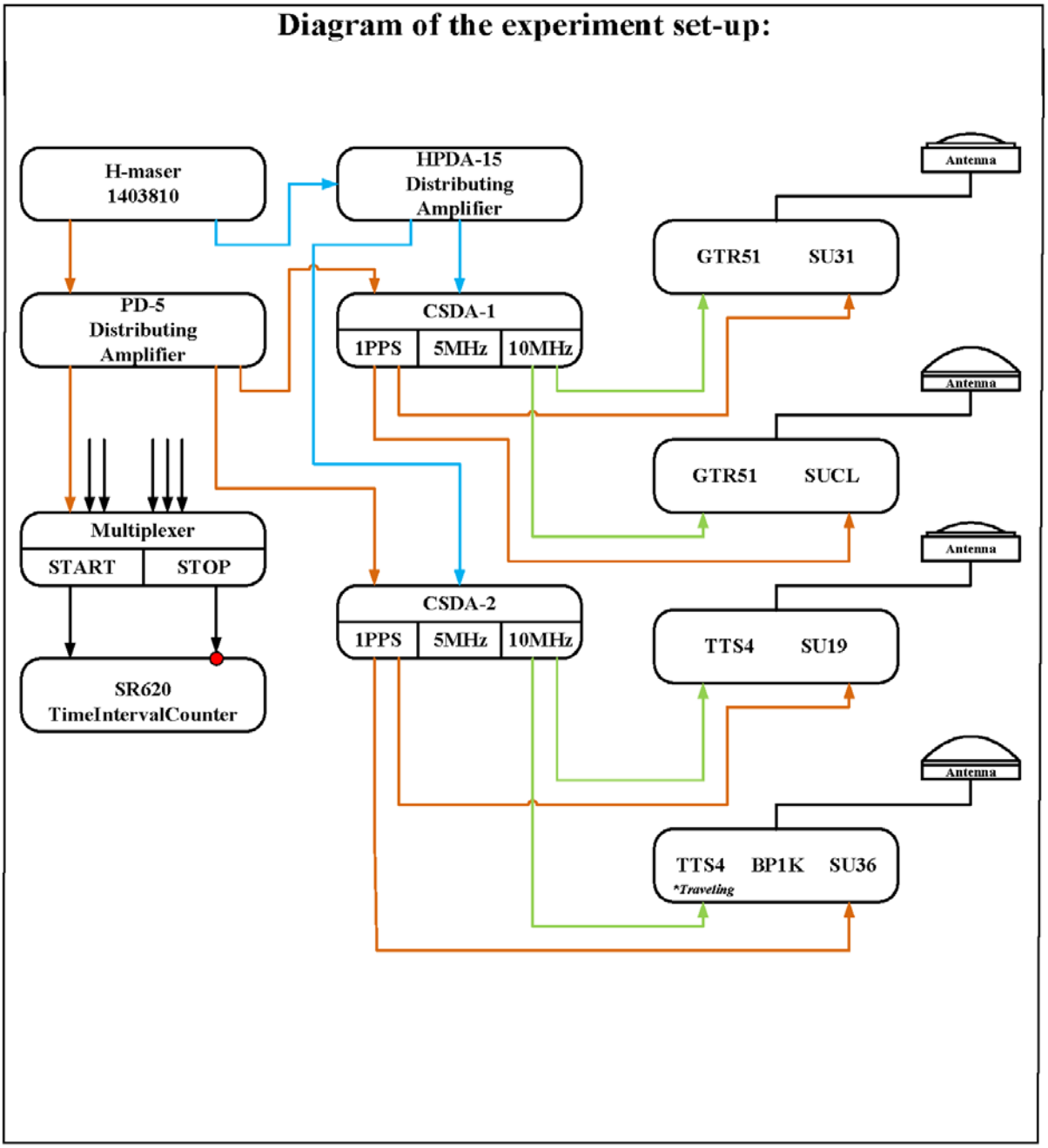
Diagram of the experiment set-up:
H-maser
1403810
HPDA-15
Distributing
Amplifier
PD-5
Distributing
Amplifier
CSDA-1
1PPS
5MHz
10MHz
Multiplexer
START
STOP
SR620
TimeIntervalCounter
CSDA-2
1PPS
5MHz
10MHz
Antenna
GTR51
SU31
Antenna
GTR51
SUCL
Antenna
TTS4
SU19
Antenna
TTS4
BP1K
SU36
*Traveling

Log of Events / Additional Information :

Description of the local method of reference delay (REFDLY) measurement for calibrated systems SU31 and SUCL:

Equipment used to measure internal delays of local receivers is a time interval counter (TIC), model SR620, maker Stanford Research Systems, s/n: 4717, with measurement uncertainty typically less than 0.5 ns (using external reference frequency as time base).

In our set-up scheme 1pps signals that come from CSDA-1 to each GTR51 receiver serves as a reference source. So that during this calibration campaign the end of each 1pps cable from CSDA-1 represents the reference point for corresponding GTR51 system. It was measured against UTC(SU) through its relation with H-maser 1403810 by using a differential method with portable clock as depicted in Figure 2. Same configuration was used to measure REFDLY values of two GTR51 systems SUCL and SU31.

As result we got the measurement quantity belonging a time interval of approximately 200 ns, so one can make a conclusion that non-linearity of the TIC should be minimal and do not have any significant impact on measurement results. The end of 1PPS auxiliary cable served as H-maser's timescale source.

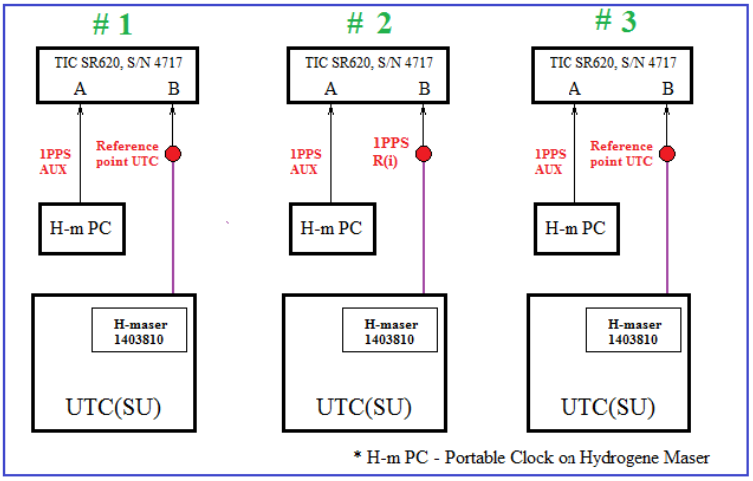

Figure 2: Measure sequence to determine 1 PPS delays to the receivers SU31, SUCL

The values measured by this method:

SU31: REFDLY = 207.5 ns
SUCL: REFDLY = 207.5 ns

Log of Events / Additional Information :

Description of the local method of reference delay (REFDLY) measurement for traveling system BP1K (SU36) and calibrated system SU19:

1 PPS signal method (1 PPS)

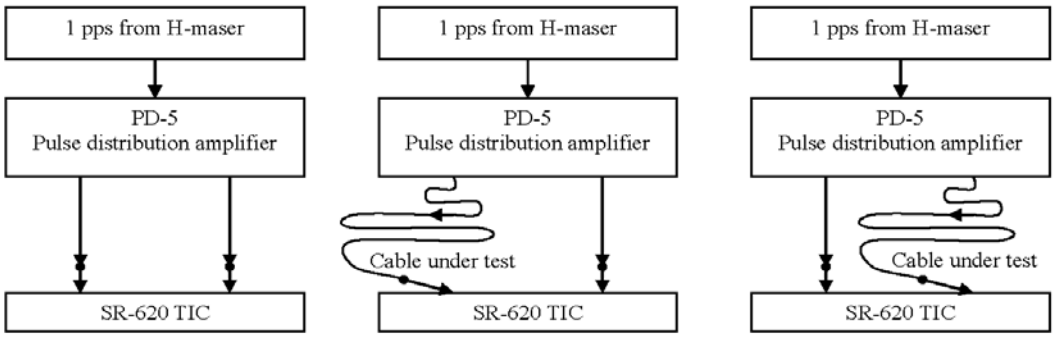

The method used to calibrate the cables is a double weight method in five steps as shown above.
At each step (i) the TIC gives the result (R_i) of 100 measurements.
The test cable delay is then obtained by the following formula:

$$\text{Delay} = \frac{R_2 - \left(\frac{R_1 + R_3}{2}\right) + \left(\frac{R_3 + R_5}{2}\right) - R_4}{2} + \text{corrections}$$

The corrections are estimated delay introduced by adaptors: -0,1 ns / adaptor

The values REFDLY were measured by this method for the SU31 and SU36 systems:

SU19: REFDLY = 197.5 ns
SU36(BP1K): REFDLY = 219.5 ns
SU36(BP1K) : CABDLY = 142.1 ns

CABDLY measurement method

The antenna cable delay measurement result CABDLY for each system were obtained by using vector network analyzer method, as depicted in Figure 4.

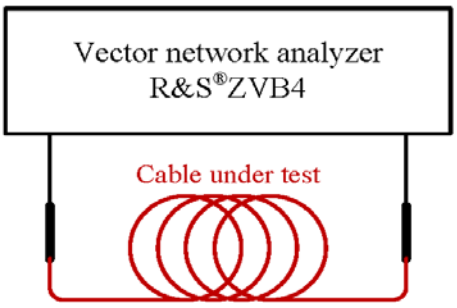

Figure 4: Determination of Antenna cable delay (CABDLY)

The values measured by this method:

SU36(BP1K) : CABDLY = 141.5 ns

BP1K-SU19

COMPUTATION OF BASELINE

Number of codes to fit baseline and biases = 262874
Number of huge residuals = 6. New iteration
Computed code bias (P1/P2)/m = 17.374 16.178
Computed baseline (X,Y,Z)/m = -1.114 1.564 0.214
RMS of residuals /m = 0.635

Number of phase differences to fit baseline = 254533
A priori baseline (X,Y,Z)/m = -1.114 1.564 0.214
24271 clock jitters computed out of 24271 intervals
AVE jitter /ps = -0.0 RMS jitter /ps = 4.0

Iter 1 Large residuals L1= 3
Iter 1 Large residuals L2= 6
Computed baseline L1 (X,Y,Z)/m = -0.104 -0.112 -0.068
RMS of residuals L1 /m = 0.004
Computed baseline L2 (X,Y,Z)/m = -0.101 -0.105 -0.067
RMS of residuals L2 /m = 0.005

Iter 2 Large residuals L1= 3
Iter 2 Large residuals L2= 6
Computed baseline L1 (X,Y,Z)/m = -0.104 -0.112 -0.068
RMS of residuals L1 /m = 0.004
Computed baseline L2 (X,Y,Z)/m = -0.101 -0.105 -0.067
RMS of residuals L2 /m = 0.005

Final baseline L1 (X,Y,Z)/m = -1.218 1.452 0.147
Final baseline L2 (X,Y,Z)/m = -1.215 1.459 0.148

COMPUTATION OF CODE DIFFERENCES

Number of code differences = 263587

Global average of individual differences
Code #pts, ave/ns, rms/ns
C1: 263482 58.151 2.672
C2: 156732 54.328 2.908
P1: 262805 58.180 2.350
P2: 262725 54.188 2.552

Number of 300s epochs in out file = 2535
Code #pts, median/ns, ave/ns, rms/ns
C1: 26417 58.185 58.143 1.240
C2: 15704 54.411 54.332 1.395
P1: 26336 58.232 58.179 1.161
P2: 26326 54.303 54.192 1.331

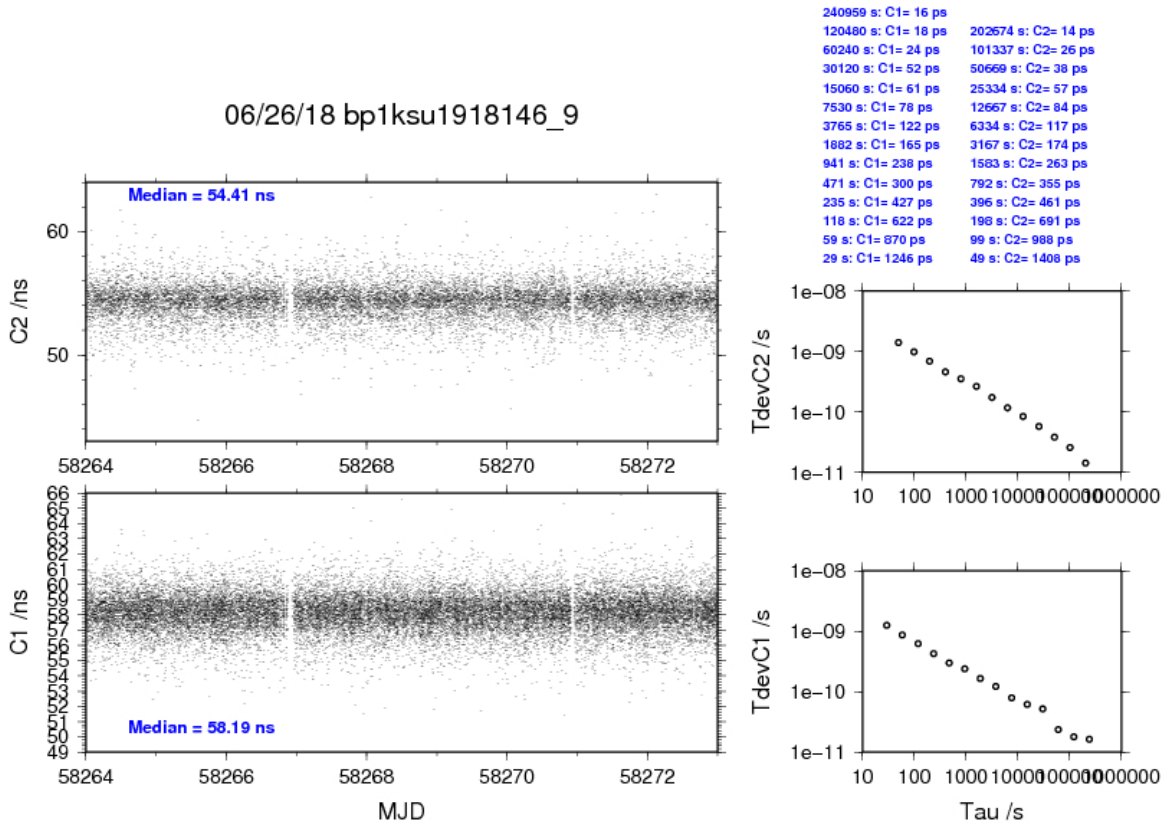
06/26/18 bp1ksu1918146_9
240959 s: C1= 16 ps
120480 s: C1= 18 ps
60240 s: C1= 24 ps
30120 s: C1= 52 ps
15060 s: C1= 61 ps
7530 s: C1= 78 ps
3765 s: C1= 122 ps
1882 s: C1= 165 ps
941 s: C1= 238 ps
471 s: C1= 300 ps
235 s: C1= 427 ps
118 s: C1= 622 ps
59 s: C1= 870 ps
29 s: C1= 1246 ps
202674 s: C2= 14 ps
101337 s: C2= 26 ps
50669 s: C2= 38 ps
25334 s: C2= 57 ps
12667 s: C2= 84 ps
6334 s: C2= 117 ps
3167 s: C2= 174 ps
1583 s: C2= 263 ps
792 s: C2= 355 ps
396 s: C2= 461 ps
198 s: C2= 691 ps
99 s: C2= 988 ps
49 s: C2= 1408 ps
Median = 54.41 ns
C2 /ns
Median = 58.19 ns
C1 /ns
MJD
TdevC2 /s
TdevC1 /s
Tau /s

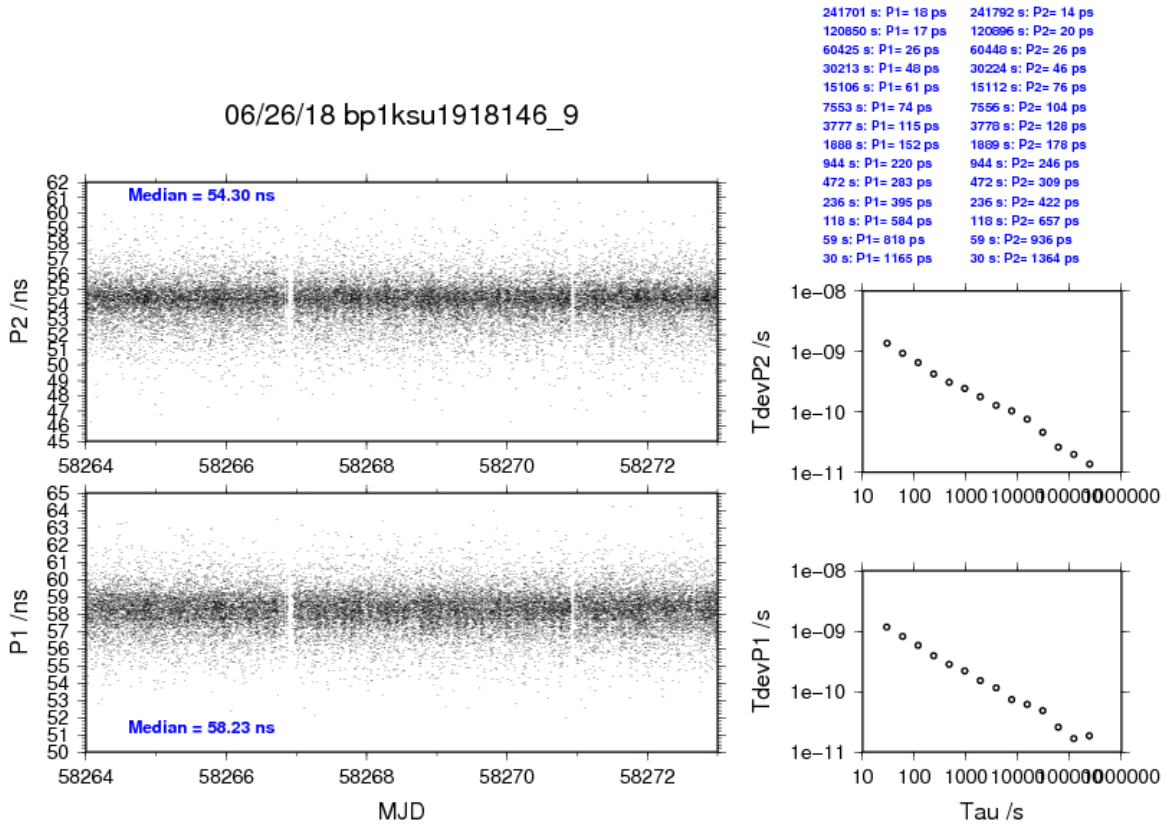
06/26/18 bp1ksu1918146_9
241701 s: P1= 18 ps
120850 s: P1= 17 ps
60425 s: P1= 26 ps
30213 s: P1= 48 ps
15106 s: P1= 61 ps
7553 s: P1= 74 ps
3777 s: P1= 115 ps
1888 s: P1= 152 ps
944 s: P1= 220 ps
472 s: P1= 283 ps
236 s: P1= 395 ps
118 s: P1= 584 ps
59 s: P1= 818 ps
30 s: P1= 1165 ps
241792 s: P2= 14 ps
120896 s: P2= 20 ps
60448 s: P2= 26 ps
30224 s: P2= 46 ps
15112 s: P2= 76 ps
7556 s: P2= 104 ps
3778 s: P2= 128 ps
1889 s: P2= 178 ps
944 s: P2= 246 ps
472 s: P2= 309 ps
236 s: P2= 422 ps
118 s: P2= 657 ps
59 s: P2= 936 ps
30 s: P2= 1364 ps
Median = 54.30 ns
P2 /ns
Median = 58.23 ns
P1 /ns
MJD
TdevP2 /s
TdevP1 /s
Tau /s

BP1K-SU31

COMPUTATION OF BASELINE

Number of codes to fit baseline and biases = 221054
Number of huge residuals = 12. New iteration
Computed code bias (P1/P2)/m = -35.015 -35.658
Computed baseline (X,Y,Z)/m = 2.677 -0.860 -0.815
RMS of residuals /m = 0.517

Number of phase differences to fit baseline = 215117
A priori baseline (X,Y,Z)/m = 2.677 -0.860 -0.815
24846 clock jitters computed out of 24846 intervals
AVE jitter /ps = 0.0 RMS jitter /ps = 3.9

Iter 1 Large residuals L1= 1
Iter 1 Large residuals L2= 1
Computed baseline L1 (X,Y,Z)/m = -0.122 -0.129 -0.064
RMS of residuals L1 /m = 0.004
Computed baseline L2 (X,Y,Z)/m = -0.114 -0.118 -0.056
RMS of residuals L2 /m = 0.004

Iter 2 Large residuals L1= 1
Iter 2 Large residuals L2= 1
Computed baseline L1 (X,Y,Z)/m = -0.122 -0.129 -0.064
RMS of residuals L1 /m = 0.004
Computed baseline L2 (X,Y,Z)/m = -0.114 -0.118 -0.056
RMS of residuals L2 /m = 0.004

Final baseline L1 (X,Y,Z)/m = 2.555 -0.989 -0.879
Final baseline L2 (X,Y,Z)/m = 2.563 -0.978 -0.871

COMPUTATION OF CODE DIFFERENCES

Number of code differences = 221613

Global average of individual differences
Code #pts, ave/ns, rms/ns
C1: 221532 -115.819 1.816
C2: 135146 -118.707 2.083
P1: 220988 -116.500 1.767
P2: 220974 -118.673 2.016

Number of 300s epochs in out file = 2566
Code #pts, median/ns, ave/ns, rms/ns
C1: 22181 -115.750 -115.800 0.883
C2: 13524 -118.656 -118.679 1.086
P1: 22113 -116.458 -116.487 0.904
P2: 22115 -118.606 -118.664 1.147

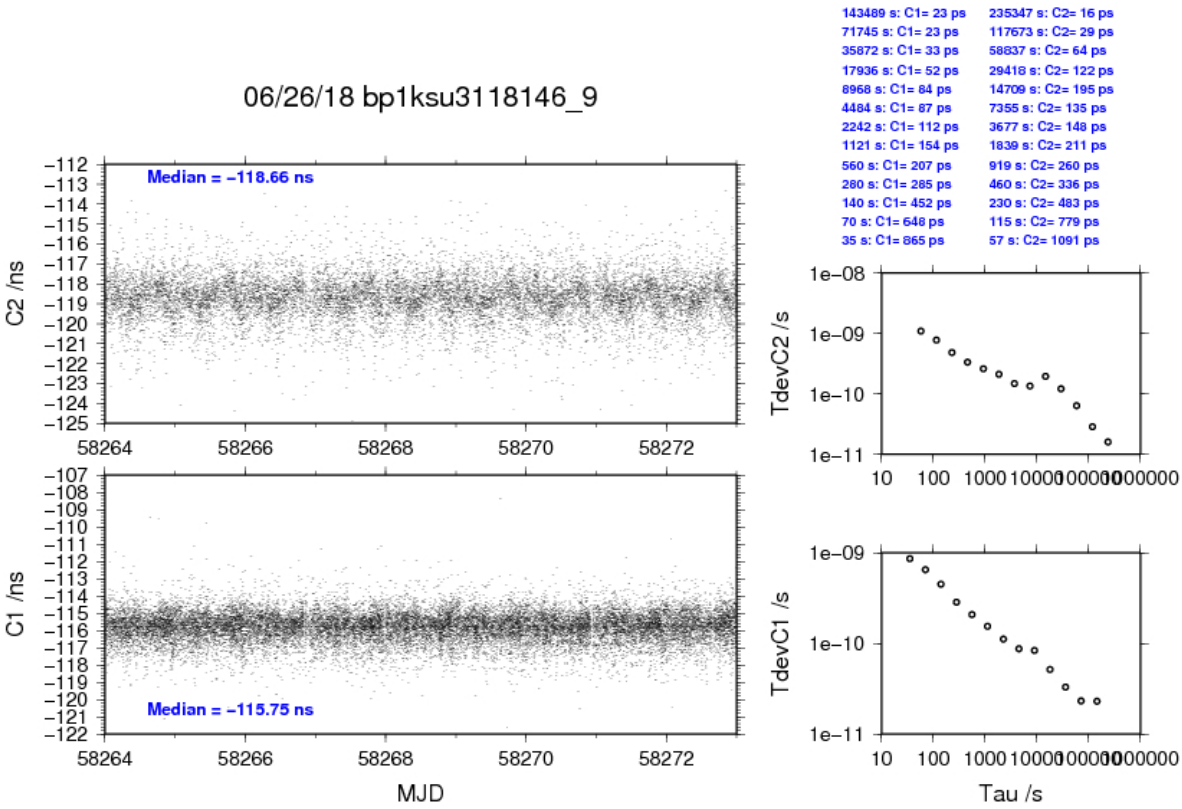
06/26/18 bp1ksu3118146_9
Median = −118.66 ns
Median = −115.75 ns
C2 /ns
C1 /ns
MJD
143489 s: C1= 23 ps
71745 s: C1= 23 ps
35872 s: C1= 33 ps
17936 s: C1= 52 ps
8968 s: C1= 84 ps
4484 s: C1= 87 ps
2242 s: C1= 112 ps
1121 s: C1= 154 ps
560 s: C1= 207 ps
280 s: C1= 285 ps
140 s: C1= 452 ps
70 s: C1= 648 ps
35 s: C1= 865 ps
235347 s: C2= 16 ps
117673 s: C2= 29 ps
58837 s: C2= 64 ps
29418 s: C2= 122 ps
14709 s: C2= 195 ps
7355 s: C2= 135 ps
3677 s: C2= 148 ps
1839 s: C2= 211 ps
919 s: C2= 260 ps
460 s: C2= 336 ps
230 s: C2= 483 ps
115 s: C2= 779 ps
57 s: C2= 1091 ps
TdevC2 /s
TdevC1 /s
Tau /s

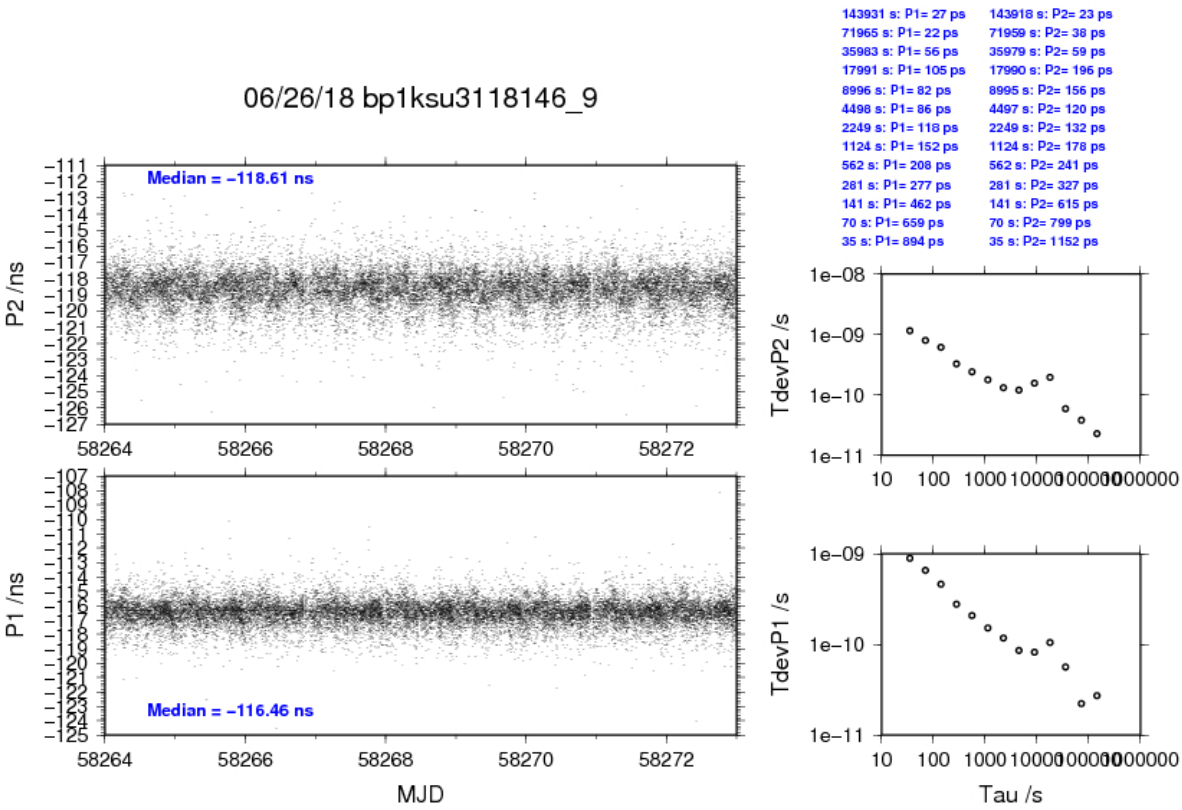
06/26/18 bp1ksu3118146_9
Median = −118.61 ns
Median = −116.46 ns
P2 /ns
P1 /ns
MJD
143931 s: P1= 27 ps
71965 s: P1= 22 ps
35983 s: P1= 56 ps
17991 s: P1= 105 ps
8996 s: P1= 82 ps
4498 s: P1= 86 ps
2249 s: P1= 118 ps
1124 s: P1= 152 ps
562 s: P1= 208 ps
281 s: P1= 277 ps
141 s: P1= 462 ps
70 s: P1= 659 ps
35 s: P1= 894 ps
143918 s: P2= 23 ps
71959 s: P2= 38 ps
35979 s: P2= 59 ps
17990 s: P2= 196 ps
8995 s: P2= 156 ps
4497 s: P2= 120 ps
2249 s: P2= 132 ps
1124 s: P2= 178 ps
562 s: P2= 241 ps
281 s: P2= 327 ps
141 s: P2= 615 ps
70 s: P2= 799 ps
35 s: P2= 1152 ps
TdevP2 /s
TdevP1 /s
Tau /s

BP1K-SUCL

COMPUTATION OF BASELINE

Number of codes to fit baseline and biases = 221491
Number of huge residuals = 17. New iteration
Computed code bias (P1/P2)/m = -35.093 -35.898
Computed baseline (X,Y,Z)/m = -4.896 3.239 1.166
RMS of residuals /m = 0.607

Number of phase differences to fit baseline = 215546
A priori baseline (X,Y,Z)/m = -4.896 3.239 1.166
24846 clock jitters computed out of 24846 intervals
AVE jitter /ps = 0.0 RMS jitter /ps = 5.0

Iter 1 Large residuals L1= 0
Iter 1 Large residuals L2= 9
Computed baseline L1 (X,Y,Z)/m = 0.049 -0.051 0.105
RMS of residuals L1 /m = 0.005
Computed baseline L2 (X,Y,Z)/m = 0.050 -0.046 0.099
RMS of residuals L2 /m = 0.006

Iter 2 Large residuals L1= 0
Iter 2 Large residuals L2= 9
Computed baseline L1 (X,Y,Z)/m = 0.049 -0.051 0.105
RMS of residuals L1 /m = 0.005
Computed baseline L2 (X,Y,Z)/m = 0.050 -0.046 0.099
RMS of residuals L2 /m = 0.006

Final baseline L1 (X,Y,Z)/m = -4.847 3.188 1.271
Final baseline L2 (X,Y,Z)/m = -4.846 3.193 1.266

COMPUTATION OF CODE DIFFERENCES

Number of code differences = 221753

Global average of individual differences
Code #pts, ave/ns, rms/ns
C1: 221678 -116.655 1.939
C2: 135241 -120.147 2.176
P1: 221421 -117.224 2.250
P2: 221371 -119.910 2.505

Number of 300s epochs in out file = 2566
Code #pts, median/ns, ave/ns, rms/ns
C1: 22195 -116.652 -116.642 0.958
C2: 13540 -120.102 -120.123 1.159
P1: 22160 -117.312 -117.228 1.106
P2: 22155 -119.927 -119.922 1.388

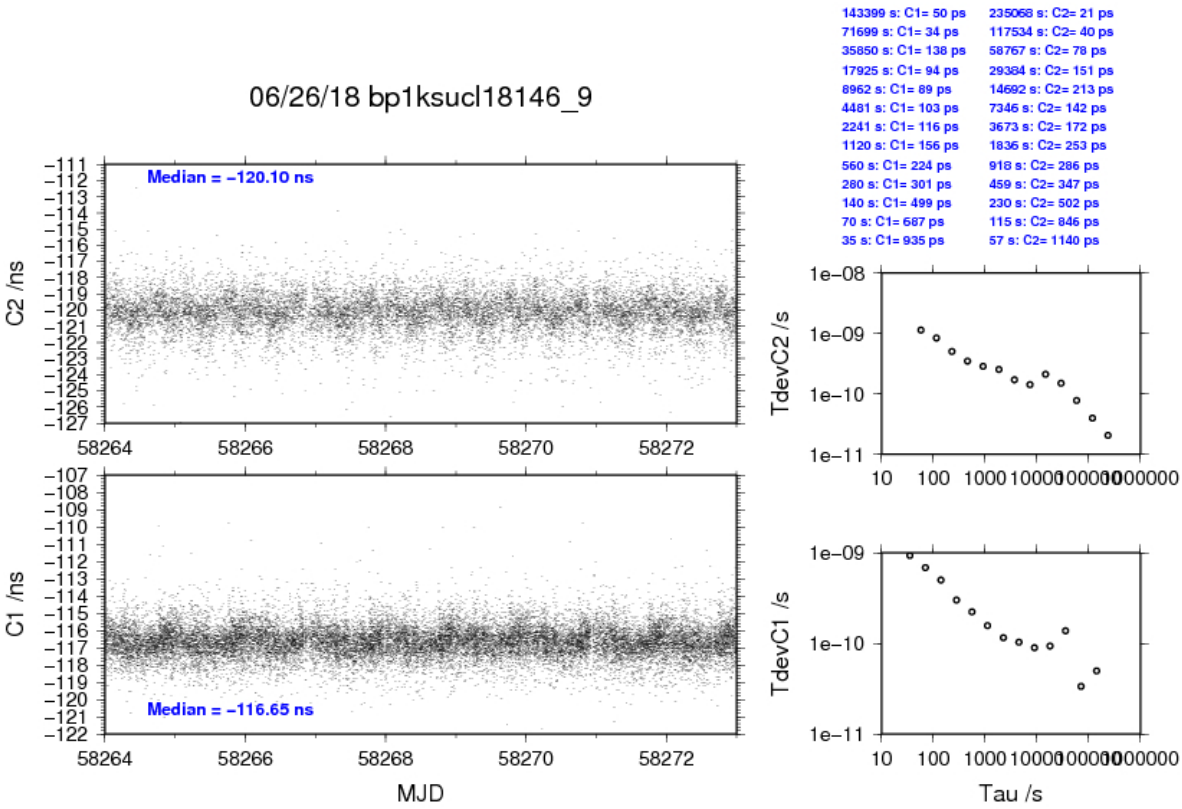
06/26/18 bp1ksucl18146_9
Median = −120.10 ns
Median = −116.65 ns
C2 /ns
C1 /ns
MJD
143399 s: C1= 50 ps
71699 s: C1= 34 ps
35850 s: C1= 138 ps
17925 s: C1= 94 ps
8962 s: C1= 89 ps
4481 s: C1= 103 ps
2241 s: C1= 116 ps
1120 s: C1= 156 ps
560 s: C1= 224 ps
280 s: C1= 301 ps
140 s: C1= 499 ps
70 s: C1= 687 ps
35 s: C1= 935 ps
235068 s: C2= 21 ps
117534 s: C2= 40 ps
58767 s: C2= 78 ps
29384 s: C2= 151 ps
14692 s: C2= 213 ps
7346 s: C2= 142 ps
3673 s: C2= 172 ps
1836 s: C2= 253 ps
918 s: C2= 286 ps
459 s: C2= 347 ps
230 s: C2= 502 ps
115 s: C2= 846 ps
57 s: C2= 1140 ps
TdevC2 /s
TdevC1 /s
Tau /s

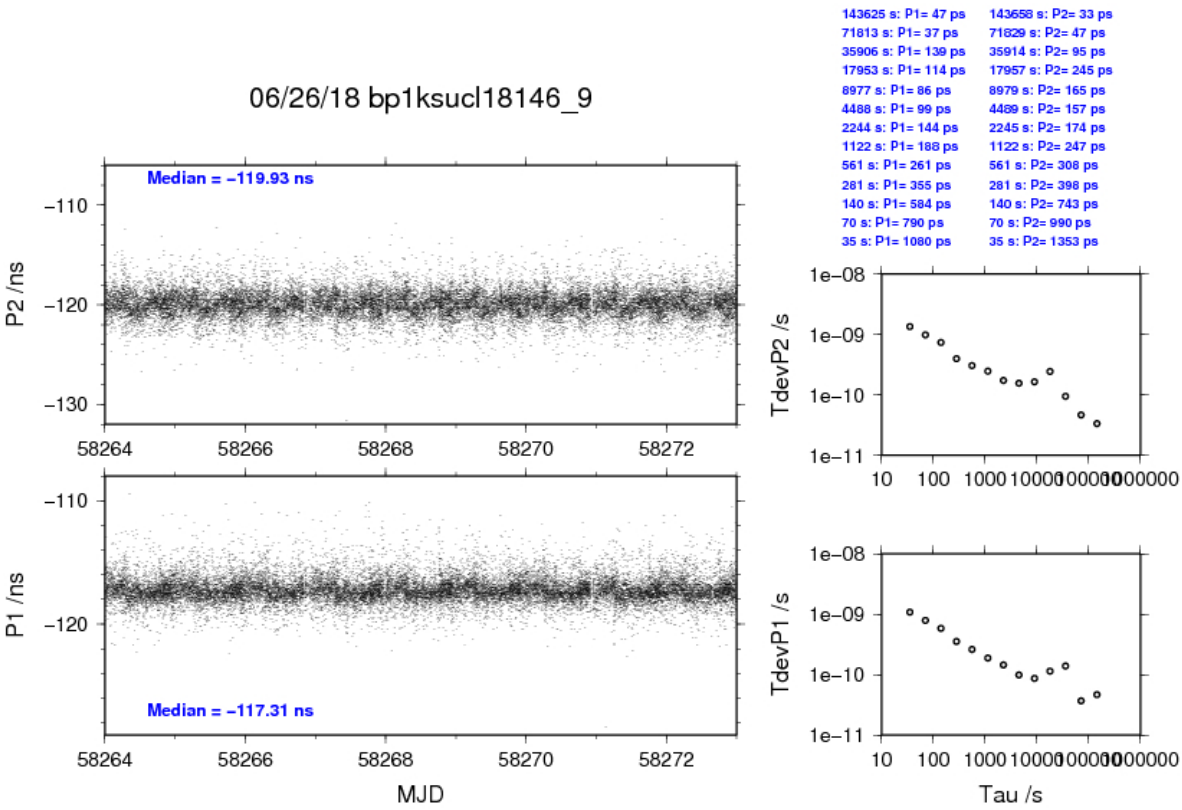
06/26/18 bp1ksucl18146_9
Median = −119.93 ns
Median = −117.31 ns
P2 /ns
P1 /ns
MJD
143625 s: P1= 47 ps
71813 s: P1= 37 ps
35906 s: P1= 139 ps
17953 s: P1= 114 ps
8977 s: P1= 86 ps
4488 s: P1= 99 ps
2244 s: P1= 144 ps
1122 s: P1= 188 ps
561 s: P1= 261 ps
281 s: P1= 355 ps
140 s: P1= 584 ps
70 s: P1= 790 ps
35 s: P1= 1080 ps
143658 s: P2= 33 ps
71829 s: P2= 47 ps
35914 s: P2= 95 ps
17957 s: P2= 245 ps
8979 s: P2= 165 ps
4489 s: P2= 157 ps
2245 s: P2= 174 ps
1122 s: P2= 247 ps
561 s: P2= 308 ps
281 s: P2= 398 ps
140 s: P2= 743 ps
70 s: P2= 990 ps
35 s: P2= 1353 ps
TdevP2 /s
TdevP1 /s
Tau /s

2.3/ BIPM (18292)

Period

MJD 58410 to 58418

Delays

BP1J:

X_O = 133.96 ns (187.84-53.88)
X_P = 47.60 ns (BP1R+C139+BP1S+C172)
REFDLY = 181.56 ns
CABDLY = 128.73 ns (C138)

BP1K:

10 MHz factory calibration = 4.45 ns
1PPS-freq offs = 89.47 ns
1PPS-freq corr = 1.97 ns
Total delay = 49.67 ns

X_O = 1.97 ns
X_P = 47.70 ns (BP1R+C139+BP1S+C162)
REFDLY = 49.67 ns
CABDLY = 141.57 ns (C131)

Setup at the BIPM

Annex A - Information Sheet

(to be repeated for each calibrated system)

Laboratory:	BIPM
Date and hour of the beginning of measurements:	MJD 58410
Date and hour of the end of measurements:	MJD 58418

Information on the system

	Local:	**Travelling:**
4-character BIPM code	BP1J	BP1K
• Receiver maker and type: Receiver serial number:	Septentrio PolaRx4proTR 27	PikTime 0136
1 PPS trigger level /V:		
• Antenna cable maker and type: Phase stabilised cable (Y/N):		
Length outside the building /m:	~ 15 m	~ 15 m
• Antenna maker and type: Antenna serial number:	Septentrio Sepchoke_MC 5131	Javad RingAnt-G3T 00526
Temperature (if stabilised) /°C		

Measured delays /ns

(if needed fill box "Additional Information" below)

	Local:	**Travelling:**
• Delay from local UTC to receiver 1 PPS-in:	47.60 ns	1.97 ns
Delay from 1 PPS-in to internal Reference (if different): (see section 2 for details)	133.96 ns	47.70 ns
• Antenna cable delay:	128.73 ns	141.57 ns
Splitter delay (if any):		(1)
Additional cable delay (if any):		(1)

Data used for the generation of CGGTTS files

• INT DLY (GPS) /ns:	
• INT DLY (GLONASS) /ns:	
• CAB DLY /ns:	
• REF DLY /ns:	
• Coordinates reference frame:	
Latitude or X /m:	
Longitude or Y /m:	
Height or Z /m:	

General information

• Rise time of the local UTC pulse:	
• Is the laboratory air conditioned:	
Set temperature value and uncertainty:	21 ± 1°C
Set humidity value and uncertainty:	

(1) For a trip with closure, not needed if the traveling equipment is used in the same set-up throughout.

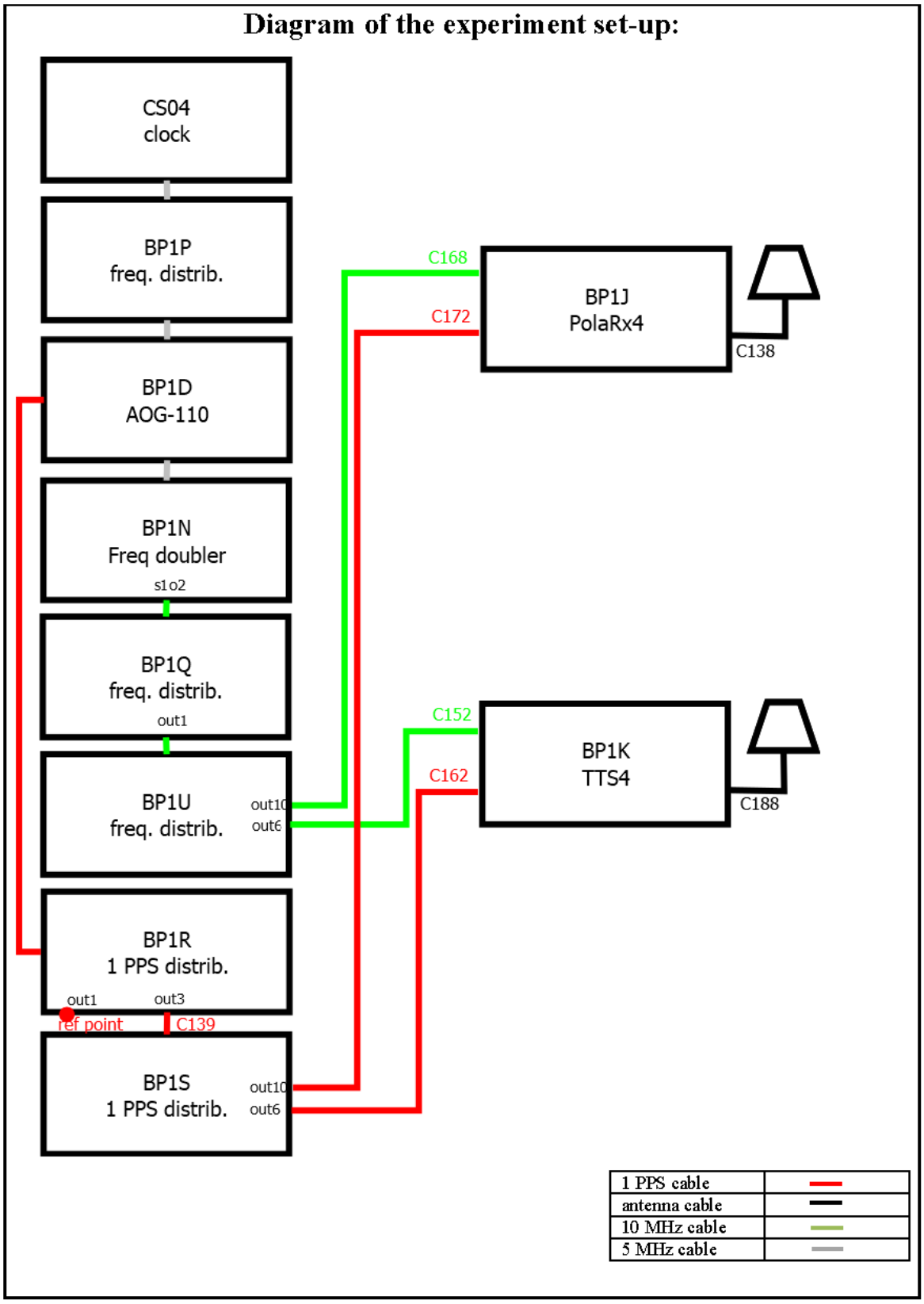
Diagram of the experiment set-up:
CS04
clock
BP1P
freq. distrib.
BP1D
AOG-110
BP1N
Freq doubler
s1o2
BP1Q
freq. distrib.
out1
BP1U
freq. distrib.
out10
out6
BP1R
1 PPS distrib.
out1
out3
ref point
C139
BP1S
1 PPS distrib.
out10
out6
C168
C172
BP1J
PolaRx4
C138
C152
C162
BP1K
TTS4
C188
1 PPS cable
antenna cable
10 MHz cable
5 MHz cable

Log of Events / Additional Information :

All measurements at BIPM carried out by L. Tisserand.

Equipment used to measure delays is a Time Interval Counter (TIC), model SR620, maker Stanford Research Systems, serial number 4680, with measurement uncertainty typically less than 0.5 ns (using external reference frequency as timebase).

BP1K-BP1J

COMPUTATION OF BASELINE

Number of codes to fit baseline and biases = 181817
Number of huge residuals = 4. New iteration
Computed code bias (P1/P2)/m = 15.519 14.865
Computed baseline (X,Y,Z)/m = 1.633 0.319 -0.893
RMS of residuals /m = 0.640

Number of phase differences to fit baseline
L1/L2 = 177084
L5 = 66306
A priori baseline (X,Y,Z)/m = 1.633 0.319 -0.893
25911 clock jitters computed out of 25911 intervals
AVE jitter /ps = -0.0 RMS jitter /ps = 4.3

Iter 1 Large residuals L1= 8
Iter 1 Large residuals L2= 8
Iter 1 Large residuals L5= 0
Computed baseline L1 (X,Y,Z)/m = -0.155 -0.076 -0.339
RMS of residuals L1 /m = 0.004
Computed baseline L2 (X,Y,Z)/m = -0.149 -0.086 -0.326
RMS of residuals L2 /m = 0.005
Computed baseline L5 (X,Y,Z)/m = -0.143 -0.088 -0.332
RMS of residuals L5 /m = 0.003
Iter 2 Large residuals L1= 8
Iter 2 Large residuals L2= 8
Iter 2 Large residuals L5= 0
Computed baseline L1 (X,Y,Z)/m = -0.155 -0.076 -0.339
RMS of residuals L1 /m = 0.004
Computed baseline L2 (X,Y,Z)/m = -0.149 -0.086 -0.326
RMS of residuals L2 /m = 0.005
Computed baseline L5 (X,Y,Z)/m = -0.143 -0.088 -0.332
RMS of residuals L5 /m = 0.003

Final baseline L1 (X,Y,Z)/m = 1.478 0.243 -1.233
Final baseline L2 (X,Y,Z)/m = 1.484 0.233 -1.220
Final baseline L5 (X,Y,Z)/m = 1.490 0.230 -1.225

COMPUTATION OF CODE DIFFERENCES

Total number of code differences = 200761

Global average of individual differences
Code #pts, ave/ns, rms/ns
C1: 182937 53.079 2.491
C2: 111137 50.932 2.996
C5: 69134 39.034 2.262
P1: 181543 52.608 2.384
P2: 181421 50.408 2.896
E1: 16447 53.975 2.251
E5: 16557 38.860 1.940

Number of 300s epochs in out file = 2592
Code #pts, median/ns, ave/ns, rms/ns
C1: 18301 53.149 53.117 1.126
C2: 11138 50.969 50.979 1.464
C5: 6924 39.109 39.050 1.386
P1: 18166 52.689 52.635 1.133
P2: 18156 50.514 50.425 1.563
E1: 1641 54.052 54.012 1.058
E5: 1651 38.908 38.864 1.156

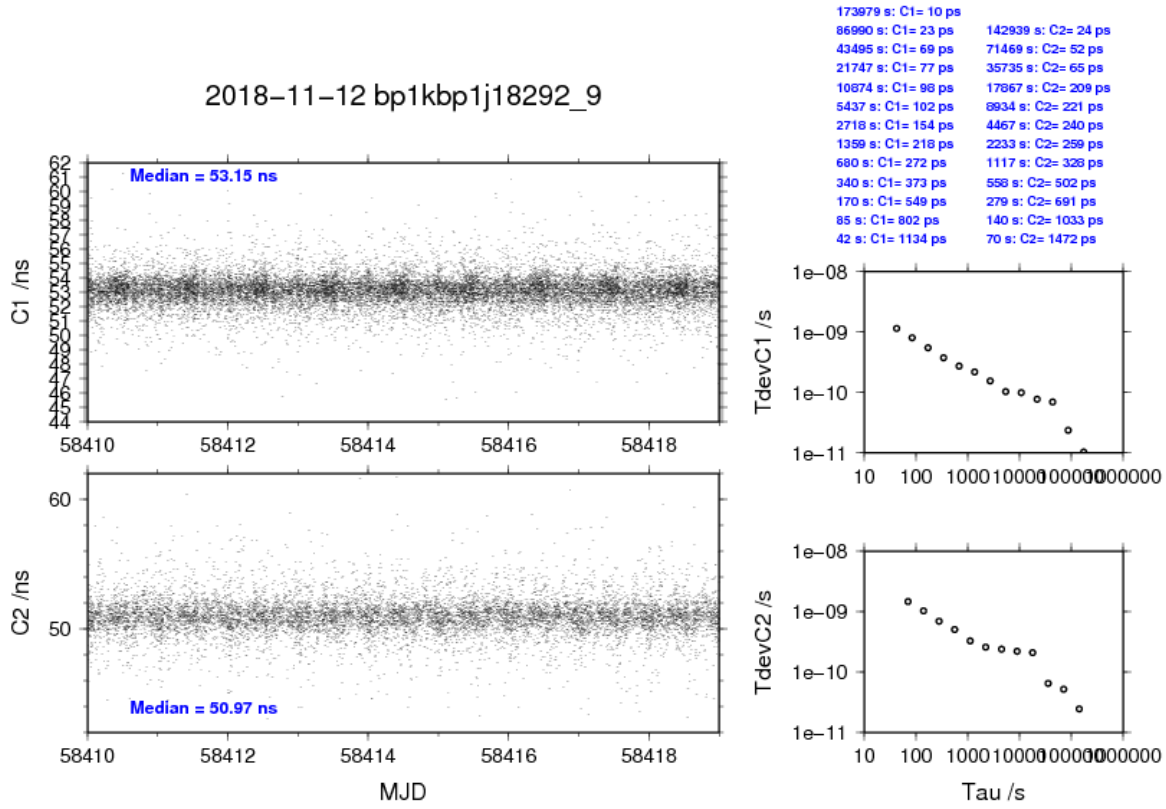
2018–11–12 bp1kbp1j18292_9
Median = 53.15 ns
Median = 50.97 ns
C1 /ns
C2 /ns
MJD
173979 s: C1= 10 ps
86990 s: C1= 23 ps
43495 s: C1= 69 ps
21747 s: C1= 77 ps
10874 s: C1= 98 ps
5437 s: C1= 102 ps
2718 s: C1= 154 ps
1359 s: C1= 218 ps
680 s: C1= 272 ps
340 s: C1= 373 ps
170 s: C1= 549 ps
85 s: C1= 802 ps
42 s: C1= 1134 ps
142939 s: C2= 24 ps
71469 s: C2= 52 ps
35735 s: C2= 65 ps
17867 s: C2= 209 ps
8934 s: C2= 221 ps
4467 s: C2= 240 ps
2233 s: C2= 259 ps
1117 s: C2= 328 ps
558 s: C2= 502 ps
279 s: C2= 691 ps
140 s: C2= 1033 ps
70 s: C2= 1472 ps
TdevC1 /s
TdevC2 /s
Tau /s

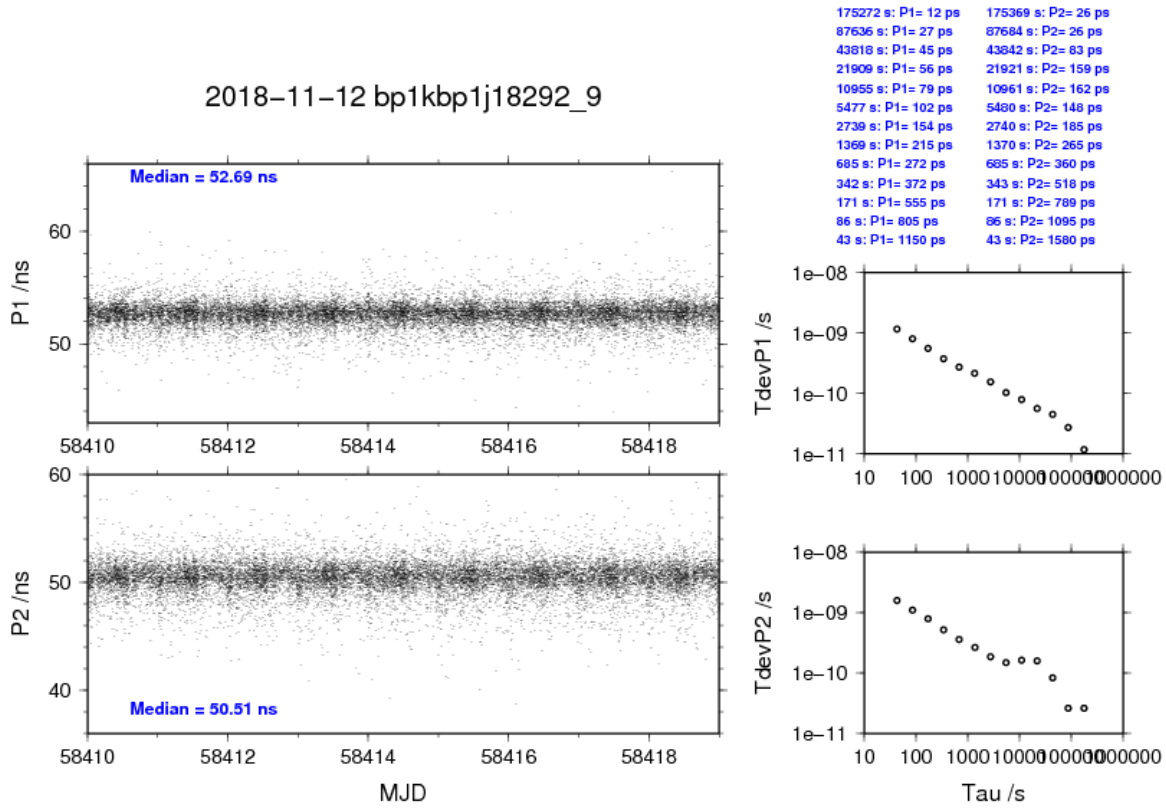
2018–11–12 bp1kbp1j18292_9
Median = 52.69 ns
Median = 50.51 ns
P1 /ns
P2 /ns
MJD
175272 s: P1= 12 ps
87636 s: P1= 27 ps
43818 s: P1= 45 ps
21909 s: P1= 56 ps
10955 s: P1= 79 ps
5477 s: P1= 102 ps
2739 s: P1= 154 ps
1369 s: P1= 215 ps
685 s: P1= 272 ps
342 s: P1= 372 ps
171 s: P1= 555 ps
86 s: P1= 805 ps
43 s: P1= 1150 ps
175369 s: P2= 26 ps
87684 s: P2= 26 ps
43842 s: P2= 83 ps
21921 s: P2= 159 ps
10961 s: P2= 162 ps
5480 s: P2= 148 ps
2740 s: P2= 165 ps
1370 s: P2= 265 ps
685 s: P2= 360 ps
343 s: P2= 518 ps
171 s: P2= 789 ps
86 s: P2= 1095 ps
43 s: P2= 1580 ps
TdevP1 /s
TdevP2 /s
Tau /s