Table of contents

Notations

As presented in [Petit et al., 2001] for the Z12-T, the calibration of a geodetic system is divided in (up to) 6 different parts (Figure 1)

- X_P = Delay of the 1PPS-in with respect to the laboratory reference
- X_O = Delay of the "internal reference" with respect to the 1PPS-in

(X_P + X_o) = REFDLY.

- X_C = antenna cable delay
- [X_D = short cable + splitter delay]

(X_C + X_D) = CABDLY. In practice, X_D is generally not used.

- X_R = receiver internal delay, measured from the "internal reference"
- X_S = antenna delay

(X_R + X_S) = INTDLY.

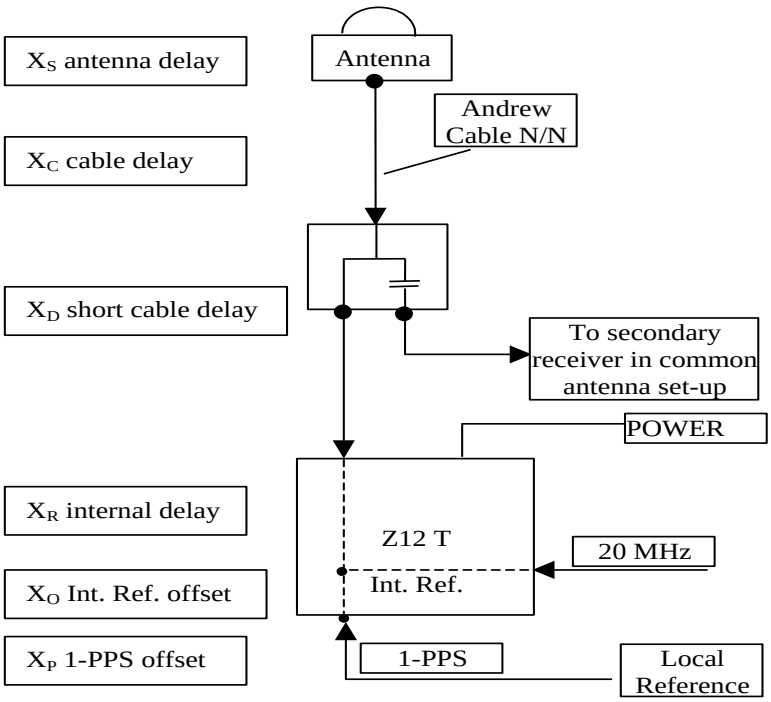

Figure 1: Definition of the different delays used in the most general set-up of a geodetic system (here shown for a Z12-T) from [Petit et al, 2001].

1/ BP1J-BP21

Laboratory: BIPM

1.1/ BIPM (18054)

Period

MJD 58172 to 58184

Delays

BP1J:

X_O = 133.94 ns	(187.82-53.88)
X_P = 47.60 ns	(BP1R+C139+BP1S+C172)
REFDLY = 181.54 ns	
CABDLY = 128.73 ns	(C138)

BP21:

X_O = 0.0 ns	(compensation of PPSin = 57.85 ns)
X_P = 42.70 ns	(BP1R+C139+BP1S+C202)
REFDLY = 42.70 ns	
CABDLY = 140.80 ns	(C201)

BP21-BP1J

COMPUTATION OF BASELINE

Number of codes to fit baseline and biases = 267333
Number of huge residuals = 3534. New iteration
Computed code bias (P1/P2)/m = 37.876 37.689
Computed baseline (X,Y,Z)/m = 2.083 0.266 -2.006
RMS of residuals /m = 0.569

Number of phase differences to fit baseline
L1/L2 = 260689
L5 = 101786
A priori baseline (X,Y,Z)/m = 2.083 0.266 -2.006
37427 clock jitters computed out of 37427 intervals
AVE jitter /ps = 0.1 RMS jitter /ps = 4.2

Iter 1 Large residuals L1= 5
Iter 1 Large residuals L2= 16
Iter 1 Large residuals L5= 1
Computed baseline L1 (X,Y,Z)/m = 0.099 0.076 0.036
RMS of residuals L1 /m = 0.003
Computed baseline L2 (X,Y,Z)/m = 0.085 0.068 0.027
RMS of residuals L2 /m = 0.005
Computed baseline L5 (X,Y,Z)/m = 0.095 0.065 0.029
RMS of residuals L5 /m = 0.003

Iter 2 Large residuals L1= 5
Iter 2 Large residuals L2= 16
Iter 2 Large residuals L5= 1
Computed baseline L1 (X,Y,Z)/m = 0.099 0.076 0.036
RMS of residuals L1 /m = 0.003
Computed baseline L2 (X,Y,Z)/m = 0.085 0.068 0.027
RMS of residuals L2 /m = 0.005
Computed baseline L5 (X,Y,Z)/m = 0.095 0.065 0.029
RMS of residuals L5 /m = 0.003

Final baseline L1 (X,Y,Z)/m = 2.182 0.342 -1.970
Final baseline L2 (X,Y,Z)/m = 2.169 0.335 -1.979
Final baseline L5 (X,Y,Z)/m = 2.178 0.331 -1.977

COMPUTATION OF CODE DIFFERENCES

Total number of code differences = 403410

Global average of individual differences

Code	**#pts**	**ave/ns**	**rms/ns**
C1	270861	126.948	1.941
C2	167665	126.410	1.901
C5	106887	118.132	1.796
P1	265494	126.093	1.769
P2	265461	125.509	2.562
E1	125958	127.574	1.721
E5	126919	118.099	1.650

Number of 300s epochs in out file = 3744

Code	**#pts**	**median/ns**	**ave/ns**	**rms/ns**
C1	27076	126.904	126.948	0.982
C2	16752	126.404	126.423	0.932
C5	10658	118.131	118.147	1.043
P1	26491	126.049	126.089	0.966
P2	26489	125.509	125.513	1.412
E1	12607	127.539	127.592	0.962
E5	12680	118.109	118.115	0.982

1.2/ BIPM (18305)

Period

MJD 58423 to 58428

Delays

BP1J:

X_O = 134.00 ns	(187.88-53.88)
X_P = 47.60 ns	(BP1R+C139+BP1S+C172)
REFDLY = 181.60 ns	
CABDLY = 128.73 ns	(C138)

BP21:

X_O = 58.05 ns	(106.83-48.78)
X_P = 42.70 ns	(BP1R+C139+BP1S+C202)
REFDLY = 100.75 ns	
CABDLY = 140.80 ns	(C201)

BP21-BP1J

COMPUTATION OF BASELINE

Number of codes to fit baseline and biases = 123860
Number of huge residuals = 1012. New iteration
Number of huge residuals = 266. New iteration
Computed code bias (P1/P2)/m = 20.041 19.813
Computed baseline (X,Y,Z)/m = 2.630 0.647 -1.665
RMS of residuals /m = 0.615

Number of phase differences to fit baseline
L1/L2 = 120533
L5 = 46060
A priori baseline (X,Y,Z)/m = 2.630 0.647 -1.665
17224 clock jitters computed out of 17224 intervals
AVE jitter /ps = -0.6 RMS jitter /ps = 3.7

Iter 1 Large residuals L1= 1
Iter 1 Large residuals L2= 3
Iter 1 Large residuals L5= 0
Computed baseline L1 (X,Y,Z)/m = -0.451 -0.226 -0.298
RMS of residuals L1 /m = 0.003
Computed baseline L2 (X,Y,Z)/m = -0.468 -0.224 -0.300
RMS of residuals L2 /m = 0.004
Computed baseline L5 (X,Y,Z)/m = -0.456 -0.234 -0.301
RMS of residuals L5 /m = 0.003

Iter 2 Large residuals L1= 1
Iter 2 Large residuals L2= 3
Iter 2 Large residuals L5= 0
Computed baseline L1 (X,Y,Z)/m = -0.451 -0.226 -0.298
RMS of residuals L1 /m = 0.003
Computed baseline L2 (X,Y,Z)/m = -0.468 -0.224 -0.300
RMS of residuals L2 /m = 0.004
Computed baseline L5 (X,Y,Z)/m = -0.456 -0.234 -0.301
RMS of residuals L5 /m = 0.003

Final baseline L1 (X,Y,Z)/m = 2.179 0.421 -1.962
Final baseline L2 (X,Y,Z)/m = 2.162 0.424 -1.965
Final baseline L5 (X,Y,Z)/m = 2.174 0.414 -1.966

COMPUTATION OF CODE DIFFERENCES

Total number of code differences = 202743

Global average of individual differences

Code	**#pts**	**ave/ns**	**rms/ns**
C1	125557	69.241	2.058
C2	76111	68.580	1.937
C5	48533	60.226	1.896
P1	122669	68.373	1.865
P2	122657	67.645	2.690
E1	72948	69.815	1.741
E5	73711	60.189	1.622

Number of 300s epochs in out file = 1726

Code	**#pts**	**median/ns**	**ave/ns,**	**rms/ns**
C1	12543	69.167	69.240	1.083
C2	7615	68.562	68.603	1.003
C5	4844	60.237	60.242	1.153
P1	12239	68.321	68.364	1.055
P2	12235	67.636	67.638	1.495
E1	7272	69.787	69.827	0.923
E5	7347	60.181	60.192	1.018

1.3/ BIPM (19081)

Period

MJD 58564 to 58582

Delays

BP1J:

X_O = 134.07 ns	(187.95-53.88)
X_P = 47.60 ns	(BP1R+C139+BP1S+C172)
REFDLY = 181.67 ns	
CABDLY = 128.73 ns	(C138)

BP21:

X_O = 58.21 ns	(107.0-48.79)
X_P = 42.70 ns	(BP1R+C139+BP1S+C202)
REFDLY = 100.91 ns	
CABDLY = 140.80 ns	(C201)

BP1J-BP21

COMPUTATION OF BASELINE

```
Number of codes to fit baseline and biases = 395556
Number of huge residuals =  2153. New iteration
Number of huge residuals =    59. New iteration
Number of huge residuals =     5. New iteration
Computed code bias (P1/P2)/m =    -19.899   -19.689
Computed baseline (X,Y,Z)/m =     -2.644    -0.664     1.675
RMS of residuals /m =      0.620

Number of phase differences to fit baseline
L1/L2 = 385986
L5    = 146602
A priori baseline (X,Y,Z)/m =     -2.644    -0.664     1.675
54682 clock jitters computed out of  54682 intervals
AVE jitter /ps =    0.7 RMS jitter /ps =    3.9

Iter  1 Large residuals L1=    1
Iter  1 Large residuals L2=   13
Iter  1 Large residuals L5=    3
Computed baseline L1 (X,Y,Z)/m =      0.481     0.233     0.293
RMS of residuals L1 /m =      0.003
Computed baseline L2 (X,Y,Z)/m =      0.492     0.234     0.299
RMS of residuals L2 /m =      0.004
Computed baseline L5 (X,Y,Z)/m =      0.466     0.246     0.299
RMS of residuals L5 /m =      0.003
No computed baseline E6, will use L1/L2
No computed baseline B3, will use L1/L2
No computed baseline E7, will use L1/L2
No computed baseline B7, will use L1/L2
No computed baseline E8, will use L1/L2
No computed baseline B8, will use L1/L2

Iter  2 Large residuals L1=    1
Iter  2 Large residuals L2=   13
Iter  2 Large residuals L5=    3
Computed baseline L1 (X,Y,Z)/m =      0.481     0.233     0.293
RMS of residuals L1 /m =      0.003
Computed baseline L2 (X,Y,Z)/m =      0.492     0.234     0.300
RMS of residuals L2 /m =      0.004
Computed baseline L5 (X,Y,Z)/m =      0.466     0.246     0.299
RMS of residuals L5 /m =      0.003
No computed baseline E6, will use L1/L2
No computed baseline B3, will use L1/L2
No computed baseline E7, will use L1/L2
No computed baseline B7, will use L1/L2
No computed baseline E8, will use L1/L2
No computed baseline B8, will use L1/L2


Final baseline L1 (X,Y,Z)/m =     -2.163    -0.431     1.968
Final baseline L2 (X,Y,Z)/m =     -2.153    -0.430     1.975
Final baseline L5 (X,Y,Z)/m =     -2.178    -0.418     1.974
```

Final baseline E6 (X,Y,Z)/m =	-2.158	-0.430	1.971
Final baseline E7 (X,Y,Z)/m =	-2.158	-0.430	1.971
Final baseline E8 (X,Y,Z)/m =	-2.158	-0.430	1.971
Final baseline B3 (X,Y,Z)/m =	-2.158	-0.430	1.971
Final baseline B7 (X,Y,Z)/m =	-2.158	-0.430	1.971
Final baseline B8 (X,Y,Z)/m =	-2.158	-0.430	1.971

COMPUTATION OF CODE DIFFERENCES

Total number of code differences = 670161

Global average of individual differences

Code	**#pts**	**ave/ns**	**rms/ns**
C1	400926	-68.759	2.020
C2	242083	-68.149	1.947
C5	154586	-59.774	1.885
P1	392809	-67.939	1.862
P2	392791	-67.270	2.688
E1	256318	-69.438	1.764
E5	259981	-59.795	1.695
E7	258693	-65.678	1.785
E8	260881	-64.016	1.241

Number of 300s epochs in out file = 5471

Code	**#pts**	**median/ns**	**ave/ns**	**rms/ns**
C1	40072	-68.758	-68.760	1.010
C2	24176	-68.136	-68.168	0.968
C5	15430	-59.788	-59.788	1.112
P1	39186	-67.937	-67.922	0.986
P2	39183	-67.288	-67.271	1.531
E1	25614	-69.438	-69.452	0.970
E5	25960	-59.796	-59.814	1.048
E7	25827	-65.696	-65.701	1.099
E8	26083	-64.003	-64.017	0.786

1.4/ BIPM (19165)

Period

MJD 58648 to 58651

Delays

BP1J:

X_O = 143.98 ns	(197.86-53.88)
X_P = 47.60 ns	(BP1R+C139+BP1S+C172)
REFDLY = 191.58 ns	
CABDLY = 128.73 ns	(C138)

BP21:

X_O = 48.35 ns	(97.14-48.79)
X_P = 42.70 ns	(BP1R+C139+BP1S+C202)
REFDLY = 91.05 ns	
CABDLY = 140.80 ns	(C201)

BP1J-BP21

COMPUTATION OF BASELINE

```
Number of codes to fit baseline and biases =  79697
Number of huge residuals =  1506. New iteration
Computed code bias (P1/P2)/m =    -26.494   -26.241
Computed baseline (X,Y,Z)/m =     -2.118    -0.270     2.025
RMS of residuals /m =      0.574

Number of phase differences to fit baseline
L1/L2 =  77355
L5    =  29660
A priori baseline (X,Y,Z)/m =     -2.118    -0.270     2.025
11487 clock jitters computed out of  11487 intervals
AVE jitter /ps =   -0.2 RMS jitter /ps =    3.8

Iter  1 Large residuals L1=    4
Iter  1 Large residuals L2=    5
Iter  1 Large residuals L5=    2
Computed baseline L1 (X,Y,Z)/m =     -0.060    -0.059    -0.044
RMS of residuals L1 /m =      0.003
Computed baseline L2 (X,Y,Z)/m =     -0.066    -0.057    -0.042
RMS of residuals L2 /m =      0.004
Computed baseline L5 (X,Y,Z)/m =     -0.098    -0.062    -0.044
RMS of residuals L5 /m =      0.003
No computed baseline E6, will use L1/L2
No computed baseline B3, will use L1/L2
No computed baseline E7, will use L1/L2
No computed baseline B7, will use L1/L2
No computed baseline E8, will use L1/L2
No computed baseline B8, will use L1/L2

Iter  2 Large residuals L1=    4
Iter  2 Large residuals L2=    5
Iter  2 Large residuals L5=    2
Computed baseline L1 (X,Y,Z)/m =     -0.060    -0.059    -0.044
RMS of residuals L1 /m =      0.003
Computed baseline L2 (X,Y,Z)/m =     -0.066    -0.057    -0.042
RMS of residuals L2 /m =      0.004
Computed baseline L5 (X,Y,Z)/m =     -0.098    -0.062    -0.044
RMS of residuals L5 /m =      0.003
No computed baseline E6, will use L1/L2
No computed baseline B3, will use L1/L2
No computed baseline E7, will use L1/L2
No computed baseline B7, will use L1/L2
No computed baseline E8, will use L1/L2
No computed baseline B8, will use L1/L2


Final baseline L1 (X,Y,Z)/m =     -2.178    -0.329     1.982
Final baseline L2 (X,Y,Z)/m =     -2.184    -0.327     1.983
Final baseline L5 (X,Y,Z)/m =     -2.216    -0.332     1.981
Final baseline E6 (X,Y,Z)/m =     -2.181    -0.328     1.982
Final baseline E7 (X,Y,Z)/m =     -2.181    -0.328     1.982
```

Final baseline E8 (X,Y,Z)/m =	-2.181	-0.328	1.982
Final baseline B3 (X,Y,Z)/m =	-2.181	-0.328	1.982
Final baseline B7 (X,Y,Z)/m =	-2.181	-0.328	1.982
Final baseline B8 (X,Y,Z)/m =	-2.181	-0.328	1.982

COMPUTATION OF CODE DIFFERENCES

Total number of code differences = 208138

Global average of individual differences

Code	**#pts**	**ave/ns**	**rms/ns**
C1	80887	-89.018	2.014
C2	49087	-88.194	1.930
C5	31605	-79.848	1.896
P1	78863	-88.171	1.766
P2	78869	-87.325	2.579
E1	50907	-89.614	1.676
E5	52247	-79.838	1.627
E7	51853	-85.854	1.668
E8	52460	-84.132	1.231

Number of 300s epochs in out file = 1150

Code	**#pts**	**median/ns**	**ave/ns**	**rms/ns**
C1	8085	-89.005	-89.010	0.933
C2	4908	-88.152	-88.210	0.963
C5	3161	-79.875	-79.872	1.075
P1	7866	-88.172	-88.165	0.893
P2	7863	-87.303	-87.331	1.512
E1	5077	-89.600	-89.628	0.876
E5	5208	-79.832	-79.857	1.048
E7	5161	-85.868	-85.870	1.039
E8	5231	-84.122	-84.129	0.752

1.5/ BIPM (19315)

Period

MJD 58798 to 58803

Delays

BP1J:

X_O = 138.63 ns	(192.51-53.88)
X_P = 47.60 ns	(BP1R+C139+BP1S+C172)
REFDLY = 186.23 ns	
CABDLY = 128.73 ns	(C138)

BP21:

X_O = 29.99 ns	(78.77-48.78)
X_P = 42.70 ns	(BP1R+C139+BP1S+C202)
REFDLY = 72.69 ns	
CABDLY = 140.80 ns	(C201)

BP21-BP1J

COMPUTATION OF BASELINE

Number of codes to fit baseline and biases = 118281
Number of huge residuals = 2226. New iteration
Computed code bias (P1/P2)/m = 30.469 30.263
Computed baseline (X,Y,Z)/m = 2.130 0.292 -2.027
RMS of residuals /m = 0.587

Number of phase differences to fit baseline
L1/L2 = 115304
L5 = 45689
A priori baseline (X,Y,Z)/m = 2.130 0.292 -2.027
17232 clock jitters computed out of 17232 intervals
AVE jitter /ps = 0.1 RMS jitter /ps = 3.7

Iter 1 Large residuals L1= 1
Iter 1 Large residuals L2= 3
Iter 1 Large residuals L5= 1
Computed baseline L1 (X,Y,Z)/m = 0.035 0.050 0.043
RMS of residuals L1 /m = 0.003
Computed baseline L2 (X,Y,Z)/m = 0.020 0.049 0.034
RMS of residuals L2 /m = 0.004
Computed baseline L5 (X,Y,Z)/m = 0.038 0.051 0.039
RMS of residuals L5 /m = 0.003

Iter 2 Large residuals L1= 1
Iter 2 Large residuals L2= 3
Iter 2 Large residuals L5= 1
Computed baseline L1 (X,Y,Z)/m = 0.035 0.050 0.043
RMS of residuals L1 /m = 0.003
Computed baseline L2 (X,Y,Z)/m = 0.020 0.049 0.034
RMS of residuals L2 /m = 0.004
Computed baseline L5 (X,Y,Z)/m = 0.038 0.051 0.039
RMS of residuals L5 /m = 0.003

Final baseline L1 (X,Y,Z)/m = 2.165 0.342 -1.984
Final baseline L2 (X,Y,Z)/m = 2.149 0.341 -1.994
Final baseline L5 (X,Y,Z)/m = 2.168 0.343 -1.989

COMPUTATION OF CODE DIFFERENCES

Total number of code differences = 200871

Global average of individual differences

Code	**#pts**	**ave/ns**	**rms/ns**
C1	119737	102.297	2.007
C2	75525	101.685	1.911
P1	117107	101.480	1.813
P2	117102	100.838	2.630
E1	76782	102.941	1.732
E5	78010	93.363	1.683

Number of 300s epochs in out file = 1725

Code	**#pts**	**median/ns**	**ave/ns**	**rms/ns**
C1	11962	102.285	102.304	1.024
C2	7547	101.694	101.709	0.952
P1	11677	101.457	101.473	0.941
P2	11676	100.868	100.851	1.447
E1	7674	102.933	102.955	0.942
E5	7798	93.356	93.383	1.033

1.6/ Information Sheet

Annex A - Information Sheet

(to be repeated for each calibrated system)

Laboratory:	BIPM
Date and hour of the beginning of measurements:	MJD 58172
Date and hour of the end of measurements:	MJD 58803

Information on the system

	Local:	Travelling:
4-character BIPM code	BP1J	BP21
• Receiver maker and type: Receiver serial number:	Septentrio PolaRx4TRpro 27	Septentrio PolaRx5TR 4701229
1 PPS trigger level /V:		
• Antenna cable maker and type: Phase stabilised cable (Y/N):	LMR-195	LMR-195
Length outside the building /m:	~ 15 m	~ 15 m
• Antenna maker and type: Antenna serial number:	Septentrio SEPCHOKE MC 5131	SEPCHOKE B3E6 5253
Temperature (if stabilised) /°C		

Measured delays /ns

(if needed fill box "Additional Information" below)

	Local:	Travelling:
• Delay from local UTC to receiver 1 PPS-in:		
Delay from 1 PPS-in to internal Reference (if different): (see section 2 for details)		
• Antenna cable delay:	128.73 ns	140.80 ns
Splitter delay (if any):		(1)
Additional cable delay (if any):		(1)

Data used for the generation of CGGTTS files

• INT DLY (GPS) /ns:	
• INT DLY (Galileo) /ns:	
• INT DLY (GLONASS) /ns:	
• CAB DLY /ns:	
• REF DLY /ns:	
• Coordinates reference frame:	
Latitude or X /m:	
Longitude or Y /m:	
Height or Z /m:	

General information

• Rise time of the local UTC pulse:	
• Is the laboratory air conditioned:	
Set temperature value and uncertainty:	22 ± 1°C
Set humidity value and uncertainty:	

(1) For a trip with closure, not needed if the traveling equipment is used in the same set-up throughout.

Diagram of the experiment set-up:

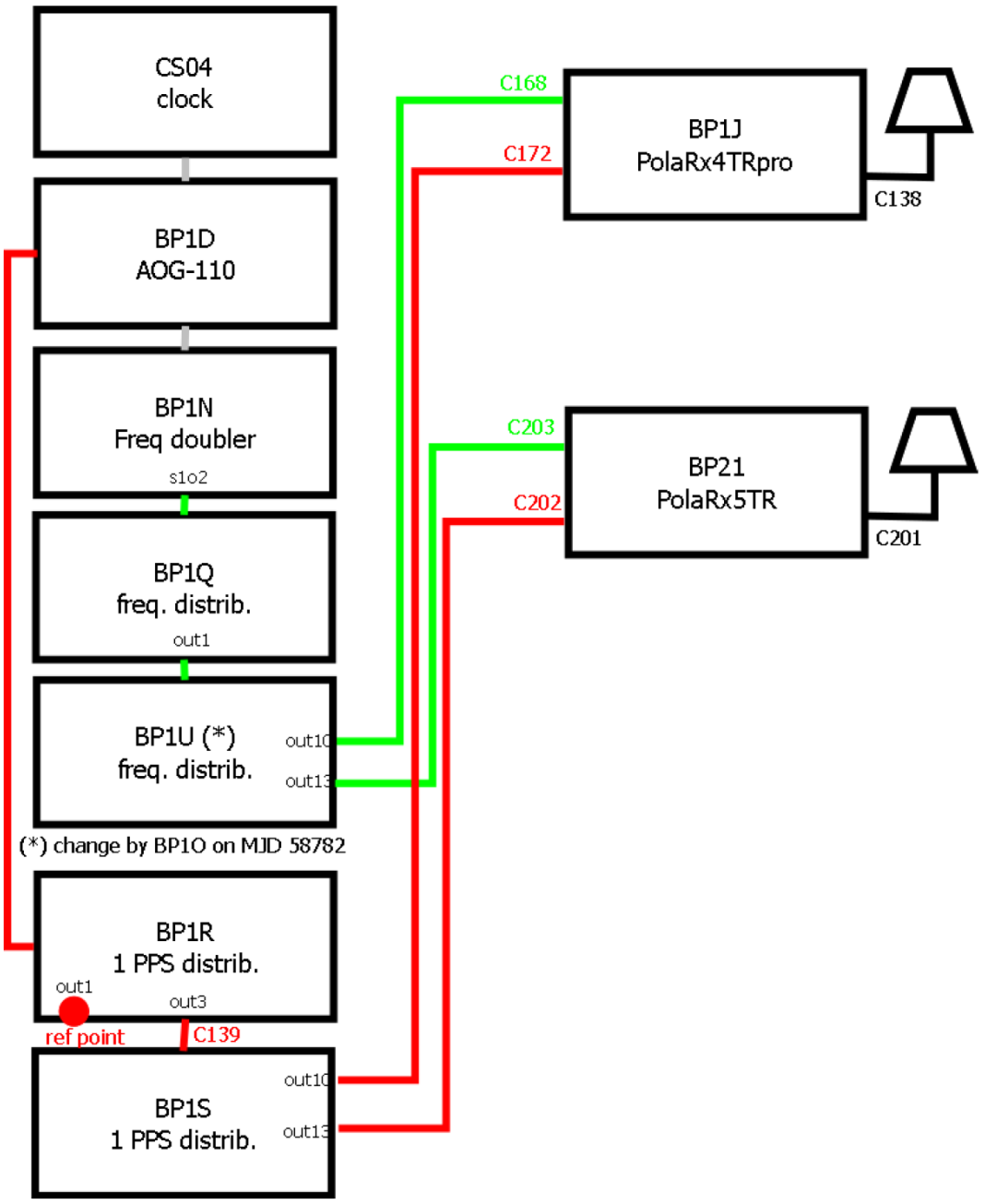

1 PPS cable	
antenna cable	
10 MHz cable	
5 MHz cable	

Log of Events / Additional Information :

All measurements at BIPM carried out by L. Tisserand.

Equipment used to measure delays is a Time Interval Counter (TIC), maker Stanford Research Systems, model SR620, serial number 4680, with measurement uncertainty typically less than 0.5 ns (using external reference frequency as timebase).